APPENDIX I

WATER SYSTEM DESIGN REPORT

AND

SEWER SYSTEM DESIGN REPORT

ENGINEER'S REPORT

POTABLE WATER SYSTEM TO SERVE

LEGOLAND New York

TOWN OF GOSHEN
ORANGE COUNTY, NEW YORK

STATE OF NEW YORK
JOHN JOSEPH O'ROURKE
085142
LICENSED PROFESSIONAL ENGINEER

Prepared By:

Lanc & Tully Engineering and Surveying, P.C.
P.O. Box 687
Goshen, New York 10924

November 15, 2016
Revised March 27, 2017

ENGINEER'S REPORT
POTABLE WATER SYSTEM TO SERVE LEGOLAND
TOWN OF GOSHEN, ORANGE COUNTY, NEW YORK

November 15, 2016
Revised March 27, 2017

PROJECT OVERVIEW

Merlin Entertainments, as Project Sponsor, proposes to construct a theme park and resort on approximately 140 acres of a 522 acre site consisting of 15 total parcels located off Harriman Drive in the Town of Goshen. The Project Site is generally located south of NYS Route 17, at exit 125, on the east side of the Town of Goshen. The Project Site has street frontage on Harriman Drive and extends south of Conklingtown Road and as far east as Arcadia Road. See Project Location Map, Figure 1.

FIGURE 1 - PROJECT LOCATION

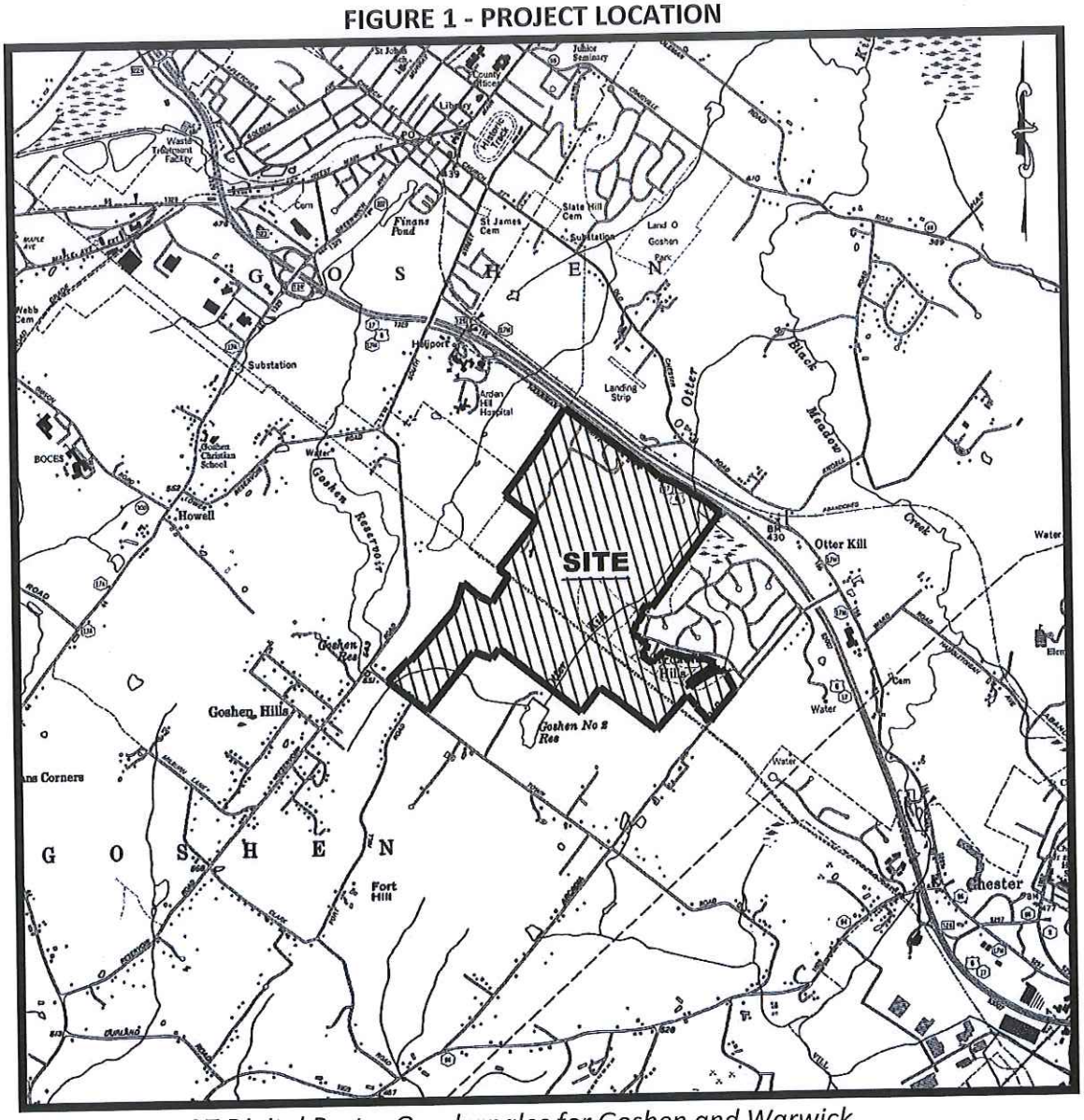

Source: NYSDOT Digital Raster Quadrangles for Goshen and Warwick

The park, to be called LEGOLAND New York, will include rides and attractions, an aquarium, theaters, restaurants, a hotel and various Back of House facilities including offices and staff areas as well as associated parking and water, sanitary sewer and drainage facilities. Merlin Entertainments will own and operate the site. All onsite improvements and infrastructure will be owned and maintained by the property owner. All offsite sanitary facilities and infrastructure will be owned and maintained by the Village of Goshen. Based on similar-sized LEGOLAND parks, between 1.5 and 2.5 million annual visitors are anticipated to the site. Hours of Operation of the park in summer months will be from 10:00AM to 8:00PM, seven days a week. During non-peak season the park will be open from 10:00AM to 6:00PM on weekdays and 10:00AM to 8:00PM on weekends. The park will be closed from November through March. The hotel, offices and aquarium will be opened year round but with reduced staff and significantly reduced numbers of visitors. Operations at the park will include a 250-room hotel, 20,000 square foot aquarium, 81,000 square feet among five buildings in the Back of House area (including administration offices, maintenance warehouse, landscaping building and trash collection) and a theme park consisting of 26 rides and attractions, 2 theaters, 10 retail areas, and approximately 15 restaurants (including both dine-in, counter service and food kiosks) in eight themed areas.

Potable water supply for LEGOLAND New York will be provided by the Village of Goshen. The project would be an "Out of District" user of the Goshen Water District. Wastewater conveyance and treatment for LEGOLAND New York will be provided by the Village of Goshen. The project would be an "Out of District" user of the Goshen Sewer District.

EXISTING WATER SUPPLY, STORAGE AND DISTRIBUTION

The Village of Goshen water supply system consists of two surface water reservoirs and one well field and is permitted by the New York State Department of Environmental Conservation to take a combined amount of water up to 1.3 MGD. The Prospect Reservoir and Green Hill Reservoir are the main source of water supply for the Village of Goshen Water District. The Prospect Reservoir is located off of Lower Reservoir Road at the site of the Village Water Filtration Plant. The Prospect Reservoir is fed by surface runoff as well as the Green Hill Reservoir, located off of Conklingtown Road. The Crystal Run Village (CRV) Well Field is located on Stony Ford Road in the Town of Wallkill and contains two Village owned wells; Well#1 is approved for 275 gpm and Well #2 is approved for 300 gpm. The permitted taking from the aquifer is limited to 0.45 MGD with Well #1 and Well #2 alternately pumping. The Crystal Run Village (CRV) Well Field is controlled by the water level in the Prospect Reservoir water storage tank.

There are four (4) existing water storage tanks: a 500,000 gallon bolted steel reservoir located at the Filter Plant at Prospect Reservoir; a 300,000 gallon glass fused bolted steel reservoir located at Glen Arden; a 464,000 gallon glass fused bolted steel standpipe located on Bridle Court; and a 300,000 gallon welded steel standpipe located on Hilltop Drive. Both the Prospect Reservoir Tank and Glen Arden Tank, which are hydraulically connected, provide water storage capacity and distribution system operational pressure for the majority of the Village. The Hilltop Tank and Harness Estates Tank provide water storage for the Village high pressure zone in their respective areas. The booster

pump stations for these zones are controlled by demand within the zones as well as system pressures controlled by the Prospect Reservoir and Glen Arden tanks.

The water distribution system is a self-contained system comprised of approximately 31.5 miles of 4" through 16" cast iron, ductile iron and asbestos concrete water mains, approximately 244 fire hydrants and over 460 valves. There are two (2) water booster stations and two (2) pressure reducing stations.

According to data supplied by the Village, the existing water system serves approximately 5,500 people through approximately 1,750 service connections. The total amount of water produced in 2015 was 239,000,000 gallons. The total amount of water delivered to customers in 2015 was 226,000,000 gallons (average 619,178 gpd). A total of 13,000,000 gallons (approximately 5.5% of production) was unaccounted for and is attributed to flushing mains, fighting fires, filter backwashing, water main and service breaks and/or leaks. The average daily water treated from all sources in 2015 was 655,178 gallons per day and the highest single day demand was 888,400 gallons.

ESTIMATED PROJECT WATER USAGE

The water distribution system designed for LEGOLAND New York is based on the project's anticipated water usage of an annual average of 176,438 GPD with peak usage in July of approximately 255,394 GPD and off-peak usage in December of approximately 49,127 GPD. The anticipated water demand is based on recorded water usage at the LEGOLAND Windsor Resort, an existing seasonal park of similar size and scope. LEGOLAND Windsor is a 150-acre park with approximately 2.2 million visitors per year with two water attractions.

Comparison of the project's anticipated water usage of 255,394 GPD during peak season and an average of 49,127 GPD during off-peak season with the estimated wastewater generation of 130,689 GPD during peak season and an average of 26,025 GPD during the off peak season indicates that wastewater generation is approximately 58% of water usage. This non-typical variation in generation / usage is attributed to the nature of the theme park with two water attractions, ice/drinks preparation and landscaping maintenance.

As stated above, the Village of Goshen has a permitted combined water yield of 1.3 MGD with an average daily treated/distributed of 0.65 MGD, leaving an excess availability of approximately 0.65 MGD. Supporting water demand for LEGOLAND New York during the peak season with 0.25 MGD is well within the Village of Goshen's permitted water supply capability. The supply capability remains sufficient when the proposed peak demand of 0.25 MGD is considered along with the supply system's highest single day demand of 0.88 MGD which results in approximately 1.14 MGD.

WATER DISTRIBUTION

LEGOLAND New York's water distribution system will connect to the existing Village of Goshen water main in Harriman Drive. Approximately 3,750 feet of 8" ductile iron water main will be installed along Harriman Drive and into the project site, to an on-site water booster station. The water booster

station will provide both domestic and fire suppression to support the park as well as maintain the water level in the water storage tank. Approximately 8,980 linear feet of 8" ductile iron will be installed through the site, predominately within the ring and service roads to provide water service to the various facilities in a closed system. Fire hydrants will be installed at all water main high points and at a maximum spacing of 600' along the length of the water mains. Domestic service will be provided to the various facilities through 3/4" or 1" Type K copper service lines with curb stops. Fire suppression systems will be provided by 4" or 6" ductile iron lines to the facilities, as appropriate, and include exterior valves and interior back flow prevention as required.

Approximately 2,755 feet of 8" ductile iron water main will be installed from the on-site water main to Arcadia Hills subdivision for use in the event of a water emergency. The on-site connection will be through a separate meter pit with a normally closed (NC) valve. A hydrant will be available at the closest point to the Arcadia Hills subdivision for an emergency connection and a valve and end cap provided in the event future extension / direct connection to the Arcadia Hills water distribution system is desired.

SYSTEM PRESSURES

In order to support the water storage and distribution system for LEGOLAND New York, a water booster station is required. Therefore, system pressures are calculated based on the water level of the tank full and will fluctuate according to the water level. Calculations of the static and residual pressure available at the high point conclude a static pressure of 30.8 psi and a residual pressure of 29.6 psi at a total flow of 1,000 gpm. Flow available at the minimum allowed operating pressure of 20 psi is calculated at 3,275 gpm. The calculations are included in Appendix A. As reflected on the calculation pages, static and residual pressures are more than adequate to support the proposed project. Calculations of the static pressure at the low point of the system (water booster station) demonstrate that a pressure reducing station would not be required with a static pressure of approximately 74 psi.

WATER BOOSTER STATION

The water booster station will be an AquaPak, factory built water booster pump station as manufactured by USEMCO, Inc., Tomah, Wisconsin. The station will be installed on the west side of the main access road to boost pressure to fill the water storage tank. The package system will have a wooden exterior façade and shingled roof to conform to the general architecture of the park. The station will be equipped with duplex Franklin Electric 45VR-02-1A - 15HP vertical multi-stage pumps, capable of providing 200 gpm against a differential head pressure of 173 feet. The turn-key station will have all internal piping, valves, instrumentation and controls, and will be equipped with a diesel fueled emergency generator and automatic transfer switch. Calculations for the booster pump requirements are included in Appendix A. The selected pump literature and datasheets are included in Appendix B.

WATER STORAGE TANK

Water from the booster station will be pumped through the site to a 559,000 gallon (nominal) water storage tank. A minimum water level elevation of 621.0 feet is required in order to provide the minimum static working pressure of 20 psi at the high point of the site distribution system. The storage tank has been sized to provide for one-day storage of average demand (255,394 gallons) plus consideration of fire flow of 2,000 gpm for 1 hour (120,000 gallons). Due to dramatic water use variations between Peak Season (255,394 gpd) and Off-Season (49,127 gpd) operations, the ISO recommended fire flow storage of 2,000 gpm for two (2) hours has been reduced by half to minimize excessive water storage during off-peak season; fire flow requirements during peak season will be supplemented by the water booster station. The storage tank is a 50' diameter – 38' high (nominal) bolted glass-fused to steel tank with a concrete floor designed and constructed in accordance with AWWA D103 (latest version). The floor elevation of the tank will be 610.0 feet with an overflow elevation of 646.5 feet. The tank will have one 24" diameter side manway access and a 30" square access hatch in the roof. The overflow pipe from the tank will discharge into a catch basin which will discharge to the ground surface of the tank site. The tank will be equipped with a pressure-actuated level indicating transmitter to detect the water level in the storage tank and transmit signals to the booster pump station controls. Alarm conditions will be transmitted via modem/dialer to the park's owner and water system operator.

CONCLUSIONS

The proposed LEGOLAND New York will generate an additional water demand of water usage of an annual average of 176,438 GPD with peak usage in July of approximately 255,394 GPD and minimal usage in December of approximately 49,127 GPD. The Village of Goshen has a permitted combined water yield of 1.3 MGD with an average daily treated/distributed of 0.65 MGD, leaving an excess availability of approximately 0.65 MGD which is more than adequate to supply the park. The required water booster pump station will be provided with a standby emergency generator to ensure operation during power outages and will also include an auto-dialer alarm system to promptly notify the project owner and operator if the booster pump station is not operating properly. The water storage tank will provide sufficient storage for both domestic and fire suppression requirements. Static and residual pressures have been calculated for the distribution system which demonstrates that more than adequate pressures will be provided at all points of the system. Therefore, no adverse impacts on the Village of Goshen water supply system are anticipated.

LANC & TULLY, P.C.

STATE OF NEW YORK
JOHN JOSEPH O'ROURKE
085142
LICENSED PROFESSIONAL ENGINEER

John O'Rourke, P.E.

JOR/DMK/
water sys.engrpt.doc

APPENDIX A
Calculations

LANC & TULLY, P.C.
P.O. Box 687
GOSHEN, NY 10924
Tel (845) 294-3700
Fax (845) 294-8609
www.lanctully.com

JOB LEGOLAND WATER SYSTEM
SHEET NO. ____ OF ____
CALCULATED BY DMK DATE 3-27-17 (REV)
CHECKED BY ____ DATE ____
SCALE ____

WATER DEMAND - BASED ON PEAK SEASON (MAY):
255,394 GPD = 177 GPM ≈ 200 GPM FOR PUMP SELECTION

WATER BOOSTER STATION:
GROUND ELEVATION @ STATION LOCATION: 480.0 FT
WATER ELEVATION (TANK FULL): 646.0 FT
Δ 166 FT

FRICTION LOSS @ 200 GPM
4,000 LF - 8" DI TO TANK + FITTINGS
0.07 psi/100 FT = 2.8 psi = 6.5' + 6.5
TOTAL HEAD 172.5 FT

WATER STORAGE TANK:
HIGH POINT HYDRANT (HOTEL) GROUND EL = 5800 → WATERMAIN HIGH POINT EL = 575.0'
20 psi REQUIRED AT HIGH POINT = 20 × 2.307 = 46.14 FT ≈ 46.0'
MIN. WATER EL FOR 20 psi = 621.0

50' Φ × 38' HIGH TANK - 559,000 GALLONS (NOMINAL)
BASE ELEVATION = 610.0 OVERFLOW EL = 646.5 FREEBOARD = 1.0 FT.
CAPACITY ABOVE ELEVATION 621.0: 646.5 - 621.0 = 25.5 FT
$\pi(25.75)^2(25.5) = 50,772.5$ CF × 7.48052 = 379,805 GALLONS ABOVE EL. 621.0
PEAK DEMAND 255,394 GPD + (2000 GPM/1 HR) 120,000 GAL = 375,394* RECOMMENDED STORAGE
* ISO RECOMMENDED FIRE FLOW REDUCED BY 1/2 - AUGMENTED BY BOOSTER STATION

SYSTEM PRESSURES:
WATER ELEVATION - TANK FULL 646.0
HIGH POINT WATERMAIN ELEVATION 575.0
71 FT × 0.43351 = 30.8 psi - STATIC

FRICTION LOSS - 905 LF 8" DI. @ 1,000 GPM
1.29 psi/100 FT × 0.9 = 1.2 psi
29.6 psi RESIDUAL @ 1000 GPM

FLOW AVAILABLE @ 20 psi @ HIGH POINT
$Q_A = 1000\left(\frac{30.8-20}{30.8-29.6}\right)^{0.54}$ Q_A = 3,275 GPM @ 20 psi

STATIC PRESSURE @ SITE LOW POINT (BOOSTER STATION)
(WATER EL) 646.0 - (WATERMAIN STATION EL) 475.0 = 171 FT = 74.1 psi ≈ 74 psi STATIC

APPENDIX B
Pump Performance Datasheets

VERTICAL MULTI-STAGE PUMPS

VR SERIES - 60 HZ

FPS

FEATURES

- All 316 SS hydraulic components for superior durability, efficiency, and performance over a wide variety of applications
- Rugged NEMA motor mounting with oversized ball bearings ensure long operating life in the toughest jobs. Heavy-duty motor bearing not required
- Silicon Carbide/Carbon/EPDM/SS mechanical seal for superior sealing
- In-line suction and discharge with round ANSI flanges fit widest range of applications and provide convenient, compact installation
- NEMA, ODP, TEFC, 1-ph or 3-ph premium efficiency available 1, and 15 to 95 VR NSF approved

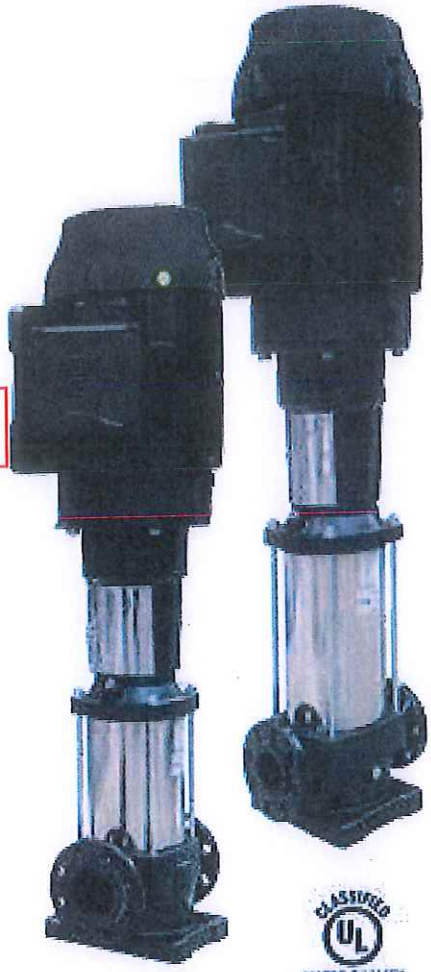

SPECIFICATIONS

- Standard 316 SS hydraulics
- Up to 600 gpm, 750' tdh / 140 m³/h, 23 bar flow and head capacities
- 360 psi (230 psi oval flange) / 26 bar (16 bar oval flange) maximum working pressure
- -15 °C to 120 °C / 5 °F to 250 °F liquid temperature range
- Clockwise rotation
- Round ANSI flanged discharge / suction ports; available options for oval / Victaulic® connections

APPLICATIONS

Water Supply and Pressure Boosting

- Pressure boosting in buildings, hotels, residences
- Booster stations
- Pump packages

Water Treatment

- Filtration systems
- Reverse osmosis systems

Light Industry

- Commercial washers
- Firefighting system pumps
- Car wash systems

Irrigation and Agriculture

- Drip irrigation
- Sprinkler irrigation

Heating, Ventilation, and Air Conditioning (HVAC)

- Cooling towers
- Temperature control
- Refrigeration
- Heating systems
- Boiler feed
- Water recirculation

Franklin Electric

VERTICAL MULTI-STAGE PUMPS

VR SERIES - 60 HZ

PERFORMANCE CURVE 45VR 60 HZ

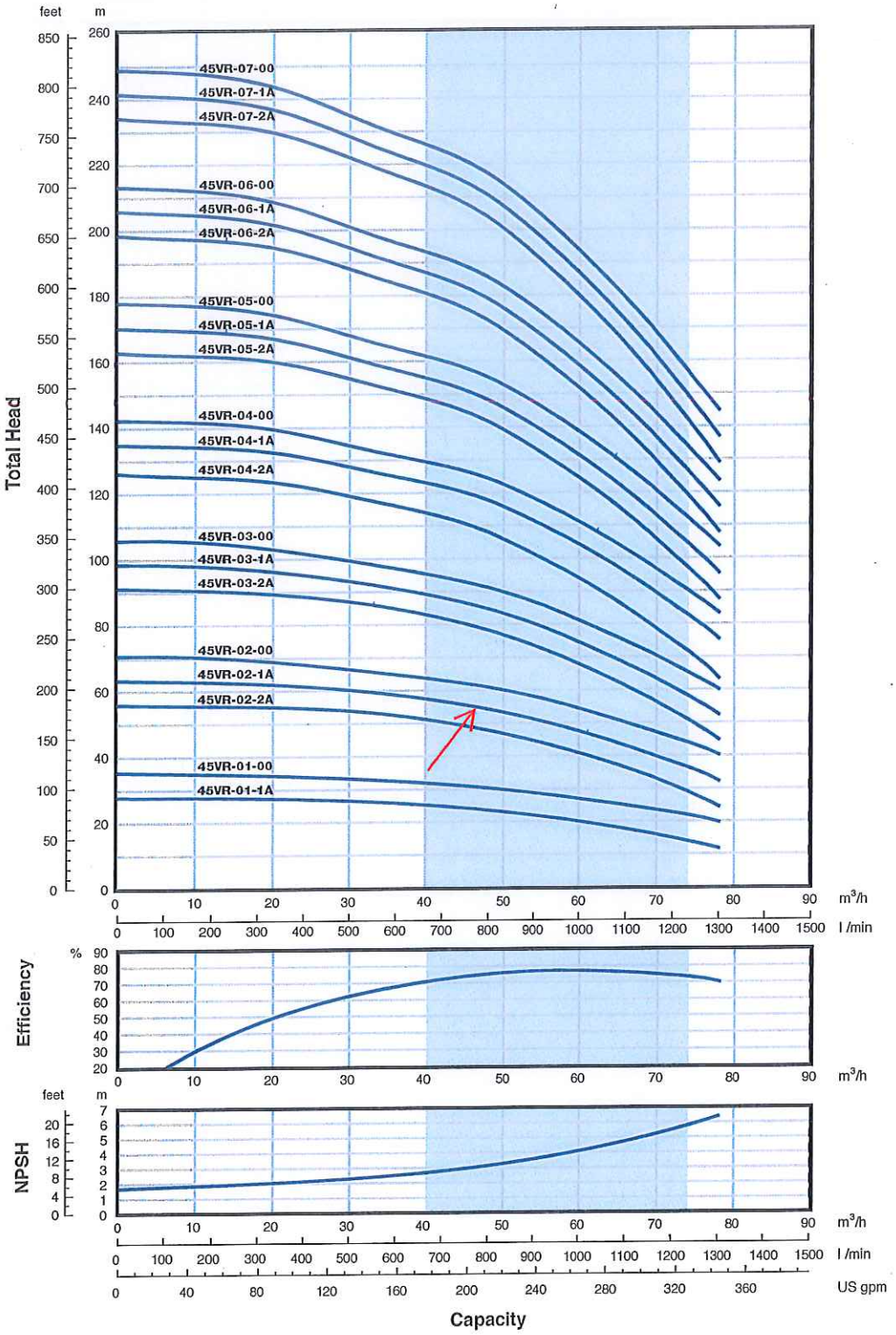

VERTICAL MULTI-STAGE PUMPS

VR SERIES - 60 HZ

DIMENSIONS 45VR 60 HZ

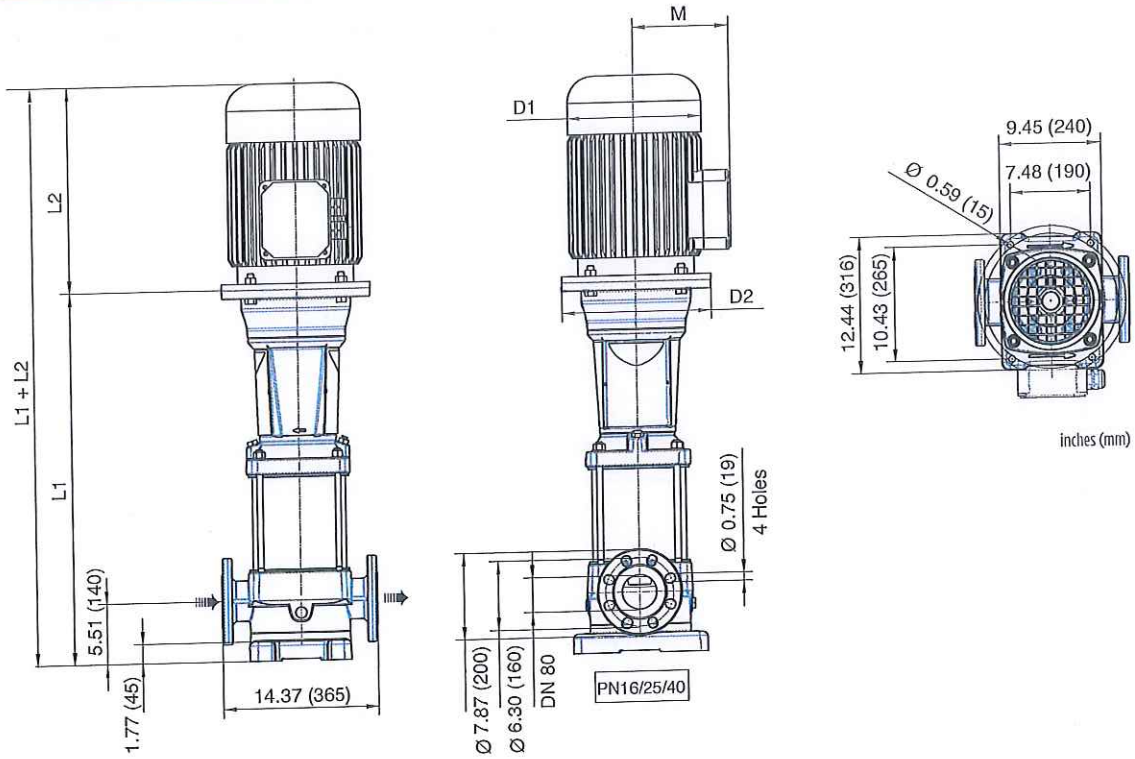

F version The pump is supplied without counterflanges (optional accessories, including bolts and joints).

Model	Motor Rated Power kW	Motor Rated Power HP	NEMA Frame	Dimensions (in) L1	L2 1Ø ODP	L2 1Ø TEFC	L2 3Ø ODP	L2 3Ø TEFC	M (max)	D1 1Ø ODP	D1 1Ø TEFC	D1 3Ø ODP	D1 3Ø TEFC	Weight (lbs) PE	Motor 1Ø ODP	Motor 1Ø TEFC	Motor 3Ø ODP	Motor 3Ø TEFC	PMA 1Ø ODP	PMA 1Ø TEFC	PMA 3Ø ODP	PMA 3Ø TEFC
45VR01-1A	5.5	7.5	213/5TC	26.65	-	-	15.124	18.628	7.973	-	-	9.846	11.306	169	-	-	103	118	-	-	272	287
45VR01-00	5.5	7.5	213/5TC	26.65	-	-	15.124	18.628	7.973	-	-	9.846	11.306	169	-	-	103	118	-	-	272	287
45VR02-2A	11	15	254/6TC	30.67	-	-	19.021	20.488	9.448	-	-	11.558	13.18	184	-	-	151	156	-	-	335	340
45VR02-1A	11	15	254/6TC	30.67	-	-	19.021	20.488	9.448	-	-	11.558	13.18	184	-	-	151	156	-	-	335	340
45VR02-00	11	15	254/6TC	30.67	-	-	19.021	20.488	9.448	-	-	11.558	13.18	184	-	-	151	156	-	-	335	340
45VR03-2A	15	20	254/6TC	33.90	-	-	18.401	21.275	9.448	-	-	11.558	13.18	193	-	-	151	211	-	-	344	404
45VR03-1A	15	20	254/6TC	33.90	-	-	18.401	21.275	9.448	-	-	11.558	13.18	193	-	-	151	211	-	-	344	404
45VR03-00	18.5	25	284/6TSC	33.90	-	-	21.073	23.307	11.073	-	-	13.7	14.173	193	-	-	298	362	-	-	491	555
45VR04-2A	22	30	284/6TSC	37.13	-	-	18.75	23.307	11.073	-	-	13.7	14.173	201	-	-	299	392	-	-	500	593
45VR04-1A	22	30	284/6TSC	37.32	-	-	18.75	23.307	11.073	-	-	13.7	14.173	207	-	-	299	392	-	-	506	599
45VR04-00	30	40	324TSC	37.32	-	-	23.651	25.866	12.575	-	-	15.118	15.827	207	-	-	531	547	-	-	738	754
45VR05-2A	30	40	324TSC	40.55	-	-	23.651	25.866	12.575	-	-	15.118	15.827	216	-	-	531	547	-	-	747	763
45VR05-1A	30	40	324TSC	40.55	-	-	23.651	25.866	12.575	-	-	15.118	15.827	216	-	-	531	547	-	-	747	763
45VR05-00	30	40	324TSC	40.55	-	-	23.651	25.866	12.575	-	-	15.118	15.827	216	-	-	531	547	-	-	747	763
45VR06-2A	30	40	324TSC	43.78	-	-	23.651	25.866	12.575	-	-	15.118	15.827	225	-	-	531	547	-	-	756	772
45VR06-1A	37	50	324/6TSC	43.78	-	-	20.935	25.866	12.575	-	-	15.118	15.827	225	-	-	532	584	-	-	757	809
45VR06-00	37	50	324/6TSC	43.78	-	-	20.935	25.866	12.575	-	-	15.118	15.827	225	-	-	532	584	-	-	757	809
45VR07-2A	37	50	324/6TSC	47.01	-	-	20.935	25.866	12.575	-	-	15.118	15.827	240	-	-	532	584	-	-	772	824
45VR07-1A	37	50	324/6TSC	47.01	-	-	20.935	25.866	12.575	-	-	15.118	15.827	240	-	-	532	584	-	-	772	824
45VR07-00	45	60	324/6TSC	47.01	-	-	27.077	28.526	16.016	-	-	17.874	17.914	240	-	-	527	825	-	-	767	1065

Franklin Electric

Pump Performance Datasheet

Company name	:
Company contact name	:
Company contact number	:
Quote number	:
Inquiry received date	:

Model/Order No	: 45VR-02-1Astg-15HP Vertical Multistage	Based on curve number	: 45VR-02-1A
Stages	: 2	Date last saved	: 27 Mar 2017 1:54 PM
Quantity of pumps in parallel	: 1		

Operating Conditions		**Liquid**	
Flow, rated	: 244.0 USgpm	Liquid type	: Water
Differential head / pressure, rated (requested)	: 160.6 ft	Additional liquid description	:
Differential head / pressure, rated (actual)	: 160.6 ft	Solids diameter, max	: 0.00 in
Suction pressure, rated / max	: 0.00 / 0.00 psi.g	Solids concentration, by volume	: 0.00 %
NPSH available, rated	: Ample	Temperature, max	: 68.00 deg F
Frequency	: 60 Hz	Fluid density, rated / max	: 1.000 / 1.000 SG
		Viscosity, rated	: 1.00 cP
Performance		Vapor pressure, rated	: 0.34 psi.a
Speed, rated	: 3450 rpm	**Material**	
Impeller diameter, rated	: 45VR-02-1A	Material selected	: 316SS
Impeller diameter, maximum	: 45VR-02-1A	**Pressure Data**	
Impeller diameter, minimum	: 45VR-02-1A	Maximum working pressure	: 88.82 psi.g
Efficiency	: 75.97 %	Maximum allowable working pressure	: 230.0 psi.g
NPSH required / margin required	: 16.70 / 0.00 ft	Maximum allowable suction pressure	: 145.0 psi.g
Ns (imp. eye flow) / Nss (imp. eye flow)	: 2,009 / 6,525 US Units	Hydrostatic test pressure	: 540.0 psi.g
MCSF	: 176.1 USgpm	**Driver & Power Data (@Max density)**	
Head, maximum, rated diameter	: 205.2 ft	Driver sizing specification	: Maximum power
Head rise to shutoff	: 27.74 %	Margin over specification	: 0.00 %
Flow, best eff. point	: 244.2 USgpm	Service factor	: 1.15 (used)
Flow ratio, rated / BEP	: 99.94 %	Power, hydraulic	: 9.89 hp
Diameter ratio (rated / max)	: 100.00 %	Power, rated	: 13.02 hp
Head ratio (rated dia / max dia)	: 100.00 %	Power, maximum, rated diameter	: 13.84 hp
Cq/Ch/Ce/Cn [ANSI/HI 9.6.7-2010]	: 1.00 / 1.00 / 1.00 / 1.00	Minimum recommended motor rating	: 15.00 hp / 11.19 kW (Fixed)
Selection status	: Acceptable		

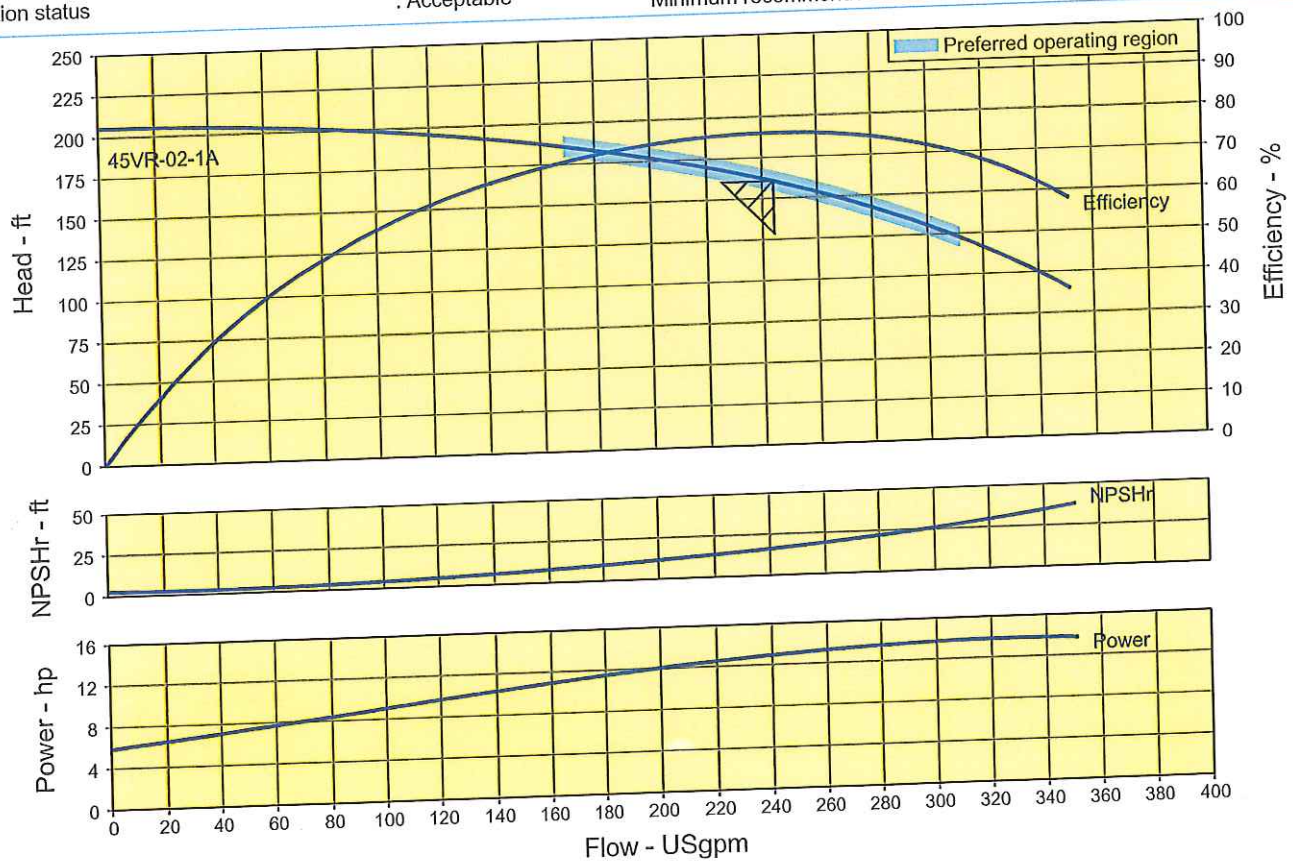

LEGOLAND WINDSOR WATER (2015)				
	PARK	HOTEL	TOTAL (M3)	TOTAL GAL
JAN	5253.00	691.00	5944.00	1,570,238.37
FEB	17703.00	1665.00	19368.00	5,116,483.30
MAR	24463.00	1130.00	25593.00	6,760,954.02
APR	20178.00	4020.00	24198.00	6,392,434.06
MAY	25409.00	2417.00	27826.00	7,350,850.07
JUNE	24214.00	2562.00	26776.00	7,073,469.47
JUL	26607.00	3363.00	29970.00	7,917,234.84
AUG	21381.00	2834.00	24215.00	6,396,924.98
SEPT	20724.00	2469.00	23193.00	6,126,941.20
OCT	19529.00	1935.00	21464.00	5,670,187.81
NOV	6862.00	2606.00	9468.00	2,501,180.50
DEC	3652.00	2113.00	5765.00	1,522,951.58
			TOTAL ANNUAL	64,399,850.19
			TOTAL GPD	176,437.95

ENGINEER'S REPORT

SANITARY SEWER SYSTEM TO SERVE

LEGOLAND New York

TOWN OF GOSHEN
ORANGE COUNTY, NEW YORK

Prepared By:

Lanc & Tully Engineering and Surveying, P.C.
P.O. Box 687
Goshen, New York 10924

November 15, 2016
Revised March 29, 2017

ENGINEER'S REPORT
SANITARY SEWER SYSTEM TO SERVE LEGOLAND
TOWN OF GOSHEN, ORANGE COUNTY, NEW YORK

November 15, 2016
Revised March 29, 2017

PROJECT OVERVIEW

Merlin Entertainments, as Project Sponsor, proposes to construct a theme park and resort on approximately 140 acres of a 522 acre site consisting of 15 total parcels located off Harriman Drive in the Town of Goshen. The Project Site is generally located south of NYS Route 17, at exit 125, on the east side of the Town of Goshen. The Project Site has street frontage on Harriman Drive and extends south of Conklingtown Road and as far east as Arcadia Road. See Project Location Map, Figure 1.

FIGURE 1 - PROJECT LOCATION

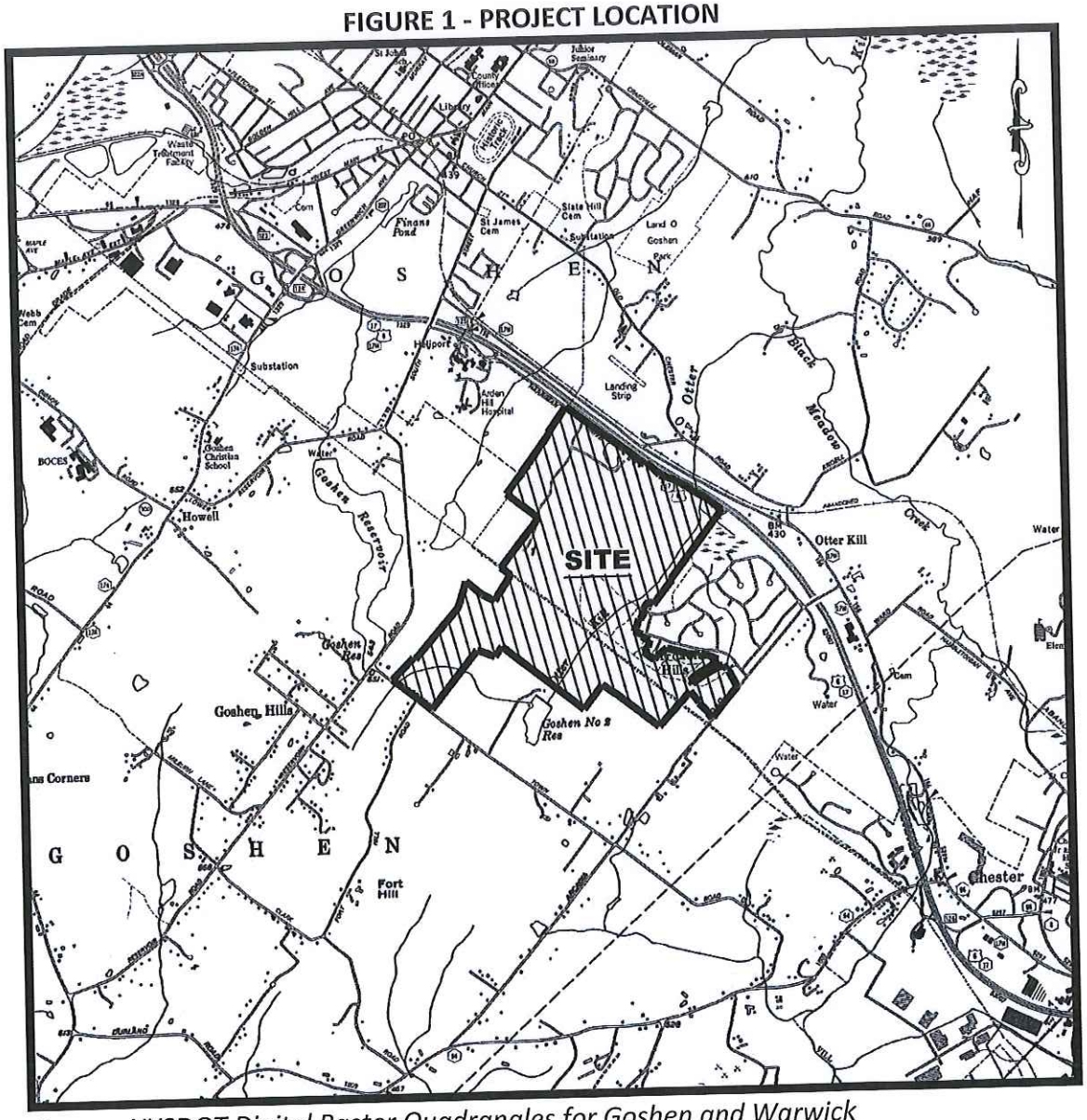

Source: NYSDOT Digital Raster Quadrangles for Goshen and Warwick

The park, to be called LEGOLAND New York, will include rides and attractions, an aquarium, theaters, restaurants, a hotel and various back-of-house facilities including offices and staff areas as well as associated parking and water, sanitary sewer and drainage facilities. Merlin Entertainments will own and operate the site. All onsite improvements and infrastructure will be owned and maintained by the property owner. All offsite sanitary facilities and infrastructure will be owned and maintained by the Village of Goshen. Based on similar-sized LEGOLAND parks, between 1.5 and 2.5 million annual visitors are anticipated to the site. Hours of Operation of the park in summer months will be from 10:00AM to 8:00PM, seven days a week. During non-peak season the park will be open from 10:00AM to 6:00PM on weekdays and 10:00AM to 8:00PM on weekends. The park will be closed from November through March. The hotel, offices and aquarium will be opened year round but with reduced staff and significantly reduced numbers of visitors. Operations at the park will include a 250-room hotel, 20,000 square foot aquarium, 81,000 square feet among five buildings in the back-of-house area (including administration offices, maintenance warehouse, landscaping building and trash collection) and a theme park consisting of 26 rides and attractions, 2 theaters, 10 retail areas, and approximately 15 restaurants (including both dine-in, counter service and food kiosks) in eight themed areas.

Wastewater conveyance and treatment for LEGOLAND New York will be provided by the Village of Goshen. The project would be an "Out of District" user of the Goshen Sewer District. Potable water supply for LEGOLAND New York will also be provided by the Village of Goshen. The project would be an "Out of District" user of the Goshen Water District.

WASTEWATER TREATMENT

The Village of Goshen Wastewater Treatment Plant, located on Cypress Road, is approximately 2.5 miles from the Project Site. The plant is permitted to treat 2 MGD based on a 30 day average under NYSDEC Permit NY0031518. Average flow treated at the wastewater treatment plant is 1.10 MGD; an additional 0.39 MGD average flow is anticipated by committed in-Village and outside Village projects under development.

ESTIMATED PROJECT WASTEWATER GENERATION

The wastewater collection and transmission system designed for LEGOLAND New York is based on the project's anticipated generation of an average of 130,689 GPD of wastewater during peak season and an average of 26,025 GPD during the off peak season. The anticipated wastewater generation is based on recorded wastewater volumes at the LEGOLAND Windsor Resort, an existing seasonal park of similar size and scope, and adjusted accordingly for the variations in the proposed LEGOLAND New York facility. LEGOLAND Windsor is a 150-acre park with approximately 2.2 million visitors per year with two water attractions. A total of 33,018,594 gallons of wastewater was generated in 2015 at LEGOLAND Windsor Resort for the park and hotel or an average of 90,462 GPD.

Comparison of the project's estimated wastewater generation of 130,689 GPD during peak season and an average of 26,025 GPD during the off peak season and anticipated water usage of 255,394 GPD during peak season and an average of 49,127 GPD during off-peak season indicates that wastewater generation is approximately 58% of water usage. This non-typical variation in generation / usage is attributed to the nature of the theme park with two water attractions, ice/drinks preparation and landscaping maintenance.

As stated above, the Village of Goshen has a permitted treatment capacity of 2.0 MGD and currently treats an average of 1.10 MGD. The additional peak season anticipated flow from LEGOLAND New York of 130,689 GPD will increase the treatment volume to approximately 1.23 MGD. Accounting for future flows generated by the anticipated committed in-Village and outside Village projects under development, total future flows to the Village wastewater treatment plant during the peak season are estimated at 1.62 MGD which is below the permitted 2.0 MGD.

WASTEWATER COLLECTION

LEGOLAND New York's onsite sewer collection will be a gravity system generally following the proposed service road which will flow to a sanitary sewer pump station to be installed near the Employee Back of House Access Drive. The LEGOLAND New York forcemain will connect to a gravity manhole on Harriman Drive in the Village of Goshen sewer collection system. The proposed sewer collection and transmission system is comprised of approximately 60 sanitary sewer manholes, approximately 9,200 linear feet of 8" gravity sewer main, a sewer pump station (on site), approximately 4,067 linear feet of SDR21 6" PVC forcemain, and related air-relief and clean-out manholes as required.

An existing 8" sanitary sewer forcemain (originally thought to be a 6" forcemain based on information provided by the Town of Goshen) is located within Harriman Drive which conveys wastewater from the Arcadia Hills sanitary sewer pump station to a gravity manhole in the Village of Goshen sewer collection system. A portion of this existing forcemain is required to be relocated for the LEGOLAND New York site development. The Arcadia Hills forcemain will be replaced from the Arcadia Hills pump station to the discharge manhole with approximately 6,988 linear feet of new SDR21 PVC forcemain and related air-relief and clean-out manholes as required, sized to accommodate the flow capacity / pumping capabilities of the existing Arcadia Hills pump station. The new forcemain will follow the same path as the existing forcemain from the pump station for approximately 1,250 linear feet where the forcemain will be relocated around the new Route 17 interchange (within the NYSDOT Right-of-Way) and then run parallel with the LEGOLAND New York forcemain for approximately 4,030 linear feet and discharge into the same gravity manhole in the Village of Goshen sewer collection system.

PUMP STATION

The Pump Station will be a PumpMate, factory built wet well mounted above-ground valve and control station for submersible pumps with factory installed equipment on a fiberglass covered reinforced concrete base and fiberglass enclosure, as manufactured by USEMCO, Inc., Tomah, Wisconsin. The principal items of equipment include a U.L certification for package pumping stations, internal piping, valves, and control panel; two submersible non-clog wastewater pumps, and auto-dialer alarm system. The pump station will be furnished with a diesel fueled standby emergency generator and automatic transfer switch. The pump station area will be fenced by 6 foot high chain link fencing and appropriately screened.

The pump station will be furnished with two (2) Grundfos SLV.30.A30.15.EX.2.61R.C submersible wastewater pumps. The design point for the pumps is 250 gpm at 75 feet TDH. The pumps selected are 15.0 HP, 3,530 RPM, with Super Vortex impellers. Only one pump is required for normal operation, the second pump is a 100% standby unit. A control panel with automatic alternator will be provided for the operation of the pumps. Controls are designed so that the standby pump will automatically start upon failure of the lead pump and/or upon liquid level reaching to the lag pump start level. A 7.0 foot inside diameter wet well with a total depth of 13 feet is proposed. Between the wet well base and the invert of the collection sewer invert is a distance of 8.5 feet, thereby providing approximately 2,447 gallons of storage capacity; a full day storage capacity is not necessary with the provision of standby emergency power to the station.

Design flow, total dynamic head, wet well capacity and pump cycle calculations for the pump station are included in Appendix A.

Preliminary float settings for LEGOLAND New York Pump Station for Peak Season operation have been calculated as follows:

Pumps Off:	427.0	Lag Pump On:	430.0
Lead Pump On:	429.0	High Level Alarm:	431.0

These settings provide a cycle time during peak flow of 5.6 minutes and a cycle time of 8.9 minutes during average flow. These cycle times are well within the manufacturer's specifications of a maximum 20 (recommended 12) starts per hour. Additionally, the pump operating will alternate with each pumping cycle.

Due to dramatic flow variations between Peak Season and Off-Peak Season, float level settings will be adjusted at a minimum twice per year. The pump station analysis and design are based on Peak Season flows as required; however, calculations for float settings during Off-Peak Season have been performed to ensure appropriate pump cycle times to avoid septic conditions due to excessive detention time in compliance with the NYSDEC standard maximum holding period of 30 minutes.

Preliminary float settings for Off-Peak Season have been calculated as follows:

Pumps Off:	427.0	Lag Pump On:	429.0
Lead Pump On:	428.0	High Level Alarm:	430.0

These settings provide a cycle time during peak flow of 9.0 minutes and a cycle time of 17.0 minutes during average flow.

Engineering data of the selected Grundros Pumps, including pump performance curve, is included in Appendix B.

CONCLUSIONS

The proposed LEGOLAND New York will generate an additional flow of 130,689 gpd during peak season operations and an additional 26,025 gpd during off-peak season operations. Accounting for additional future committed flows from projects under development, total anticipated flow to the Village of Goshen wastewater treatment plant is estimated at 1.62 MGD, well within the plants permitted treatment volume. The new sanitary sewer infrastructure, including the Arcadia Hills forcemain, will be constructed and tested in accordance with NYSDEC requirements to ensure no inflow or infiltration to the Village of Goshen sanitary sewer system. The pump station will be provided with a standby emergency generator to ensure operation during power outages and will also include an auto-dialer alarm system to promptly notify the project owner and operator if the pump station is not operating properly. No adverse impacts on the Village of Goshen sanitary sewer and wastewater treatment systems are anticipated.

LANC & TULLY, P.C.

John O'Rourke, P.E.

STATE OF NEW YORK
JOHN JOSEPH O'ROURKE
085142
LICENSED PROFESSIONAL ENGINEER

JOR/DMK/
sewer sys.engrpt.doc

APPENDIX A
Design Calculations

Design Flow

The wastewater collection and transmission system designed for LEGOLAND New York is based on the project's anticipated generation of an average of 130,689 GPD of wastewater during peak season and an average of 26,025 GPD during the off peak season. The anticipated wastewater generation is based on recorded wastewater volumes at the LEGOLAND Windsor Resort, an existing seasonal park of similar size and scope, and adjusted accordingly for the variations in the proposed LEGOLAND New York facility.

Peak Season flow =	130,689 gpd =	90.8 gpm average flow
Peak Multiplier x 2.0		2.0
(assuming 10,000 population)		181.6 gpm peak flow
*Off-Peak Season flow =	26,025 gpd =	18.1 gpm average flow
Peak Multiplier x 2.0		2.0
(assuming 5,000 population)		36.2 gpm peak flow

* *Due to dramatic flow variations between Peak Season and Off-Peak Season, float level settings will be adjusted at a minimum twice per year. Analysis and design are based on Peak Season flows.*

Total Dynamic Head Calculations

Static Head

Discharge elevation	= 484.50 feet
Pumps off elevation	= 428.00 feet
Static Head	= 56.50 feet
Friction Loss	+ 18.40 feet
Total Dynamic Head:	**= 74.90 feet ≈ 75 feet**

Friction losses in 6" SDR26 at 250 gpm - 4,200 lf pipe & fittings
0.19 psi / 100' x 42 = 7.98 psi x 2.307 = 18.4 feet

Based upon the total dynamic head* of 31.5 feet, Grundfos SLV.30.A30.150.EX.2.61R.C, 15 HP submersible pumps with Super Vortex impellers will pump 250 gpm at an efficiency of approximately 34.7 percent.

Wet Well Capacity Calculations (Peak Season)

Rim El	=	436.50
Inv Out	=	432.00
Inv In	=	432.00
HL Alarm	=	431.00
HL On	=	430.00
LL On	=	429.00
Pumps Off	=	427.00
Suction El	=	424.00
Base El	=	423.50

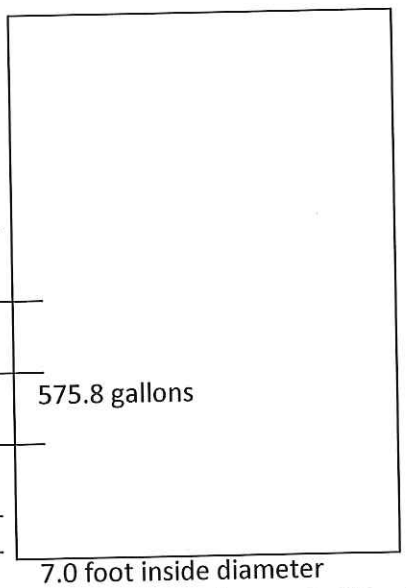

7.0 foot inside diameter
(volume = $\pi \times r^2$ = 38.48 cf/ft = 287.9 gallons)

Invert In	= 432.0
Base Elevation	= 423.5
	8.5 ft
	x 287.9
Storage =	2,447 gallons**

**standby emergency power generator to be provided at pump station

Pump Cycles

Peak Season:

575.8 gal / 90.8 gpm = 6.3 minutes (average) +2.6 minutes pump time = 8.9 minutes
575.8 gal / 181.6 gpm = 3.2 minutes (peak) +2.6 minutes pump time = 5.8 minutes

Wet Well Capacity Calculations (Off-Peak Season)

Rim El	=	436.50
Inv Out	=	432.00
Inv In	=	432.00
HL Alarm	=	430.00
HL On	=	429.00
LL On	=	428.00
Pumps Off	=	427.00
Suction El	=	424.00
Base El	=	423.50

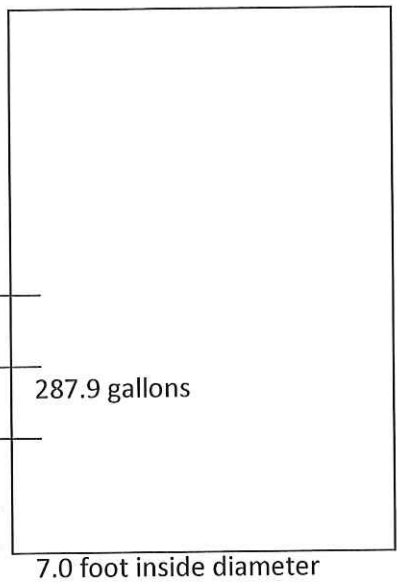

7.0 foot inside diameter
(volume = $\pi \times r^2$ = 38.48 cf/ft = 287.9 gallons)

Invert In = 432.0
Base Elevation = 423.5
8.5 ft
x 287.9
Storage = 2,447 gallons**

**standby emergency power generator to be provided at pump station

Pump Cycles

Off-Peak Season:

287.9 gal / 18.1 gpm = 15.9 minutes (average) +1.1 minutes pump time = 17.0 minutes
287.9 gal / 36.2 gpm = 7.9 minutes (peak) +1.1 minutes pump time = 9.0 minutes

APPENDIX B
Engineering Data

GRUNDFOS

Company name:
Created by:
Phone:

Date: 3/29/2017

Position	Count	Description
	1	**SLV.30.A30.150.EX.2.61R.C**

Product photo could vary from the actual product

Product No.: 99030265

Non-self-priming, single-stage, centrifugal pump designed for handling wastewater, process water and unscreened raw sewage.

The pump is designed for intermittent and continous operations in submerged installation. The efficient SuperVortex impeller provides passage of long fibres and solids up to 3 1/8 in and is suitable for wastewater with a dry matter content of up to 5 %.

A unique stainless-steel clamp assembling system enables quick and easy disassembly of the pump from the motor unit for service and inspection. No special tools are required. Pipework connection is via a ANSI flange.

The pump is explosion-proof.

Controls:

Moisture sensor:	with moisture sensors
Water-in-oil sensor:	without water-in-oil sensor

Liquid:

Pumped liquid:	Water
Maximum liquid temperature:	32 °F
Q_OpFluidTemp:	68 °F
Density:	62.4 lb/ft³
Kinematic viscosity:	1 cSt

Technical:

Actual calculated flow:	264 US gpm
Resulting head of the pump:	77.05 ft
Type of impeller:	Super Vortex
Maximum particle size:	3 1/8 in
Primary shaft seal:	SIC/SIC
Secondary shaft seal:	CARBON/CERAMICS
Approvals on nameplate:	CSA, FM
Curve tolerance:	ANSI/HI11.6:2012 3B

Materials:

Pump housing:	EN-GJL-250
Impeller:	EN-GJL-250
Motor:	EN-GJL-250

Installation:

Maximum ambient temperature:	104 °F
Flange standard:	ANSI
Pump inlet:	80
Pump outlet:	80
Pressure stage:	PN 10

GRUNDFOS

Company name:
Created by:
Phone:

Date: 3/29/2017

Position	Count	Description	
		Maximum installation depth:	65.62 ft
		Frame range:	D
		Electrical data:	
		Power input - P1:	12.6 kW
		Rated power - P2:	15 HP
		Main frequency:	60 Hz
		Rated voltage:	3 x 230/460 V
		Voltage tolerance:	+10/-10 %
		Max starts per. hour:	20
		Rated current:	37/20 A
		Starting current:	240 A
		Cos phi - power factor:	0.87
		Cos phi - p.f. at 3/4 load:	0.84
		Cos phi - p.f. at 1/2 load:	0.77
		Rated speed:	3530 rpm
		Motor efficiency at full load:	90.7 %
		Motor efficiency at 3/4 load:	91.2 %
		Motor efficiency at 1/2 load:	91.2 %
		Number of poles:	2
		Start. method:	star/delta
		Enclosure class (IEC 34-5):	IP68
		Insulation class (IEC 85):	H
		Explosion proof:	yes
		Length of cable:	49 ft
		Cable type:	SEOOW 600V
		Others:	
		Net weight:	394 lb

Company name:
Created by:
Phone:

Date: 3/29/2017

99030265 SLV.30.A30.150.EX.2.61R.C 60 Hz

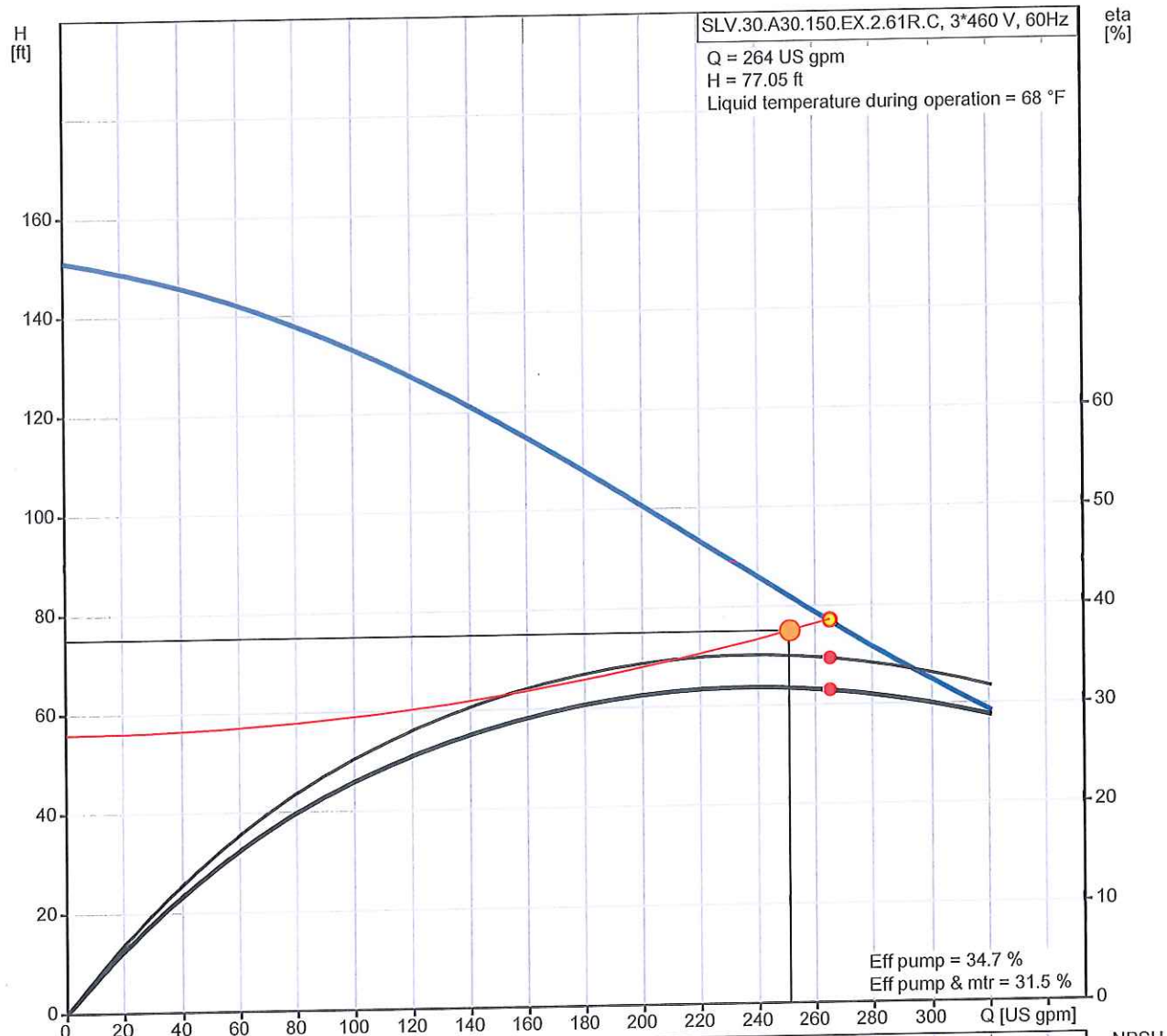

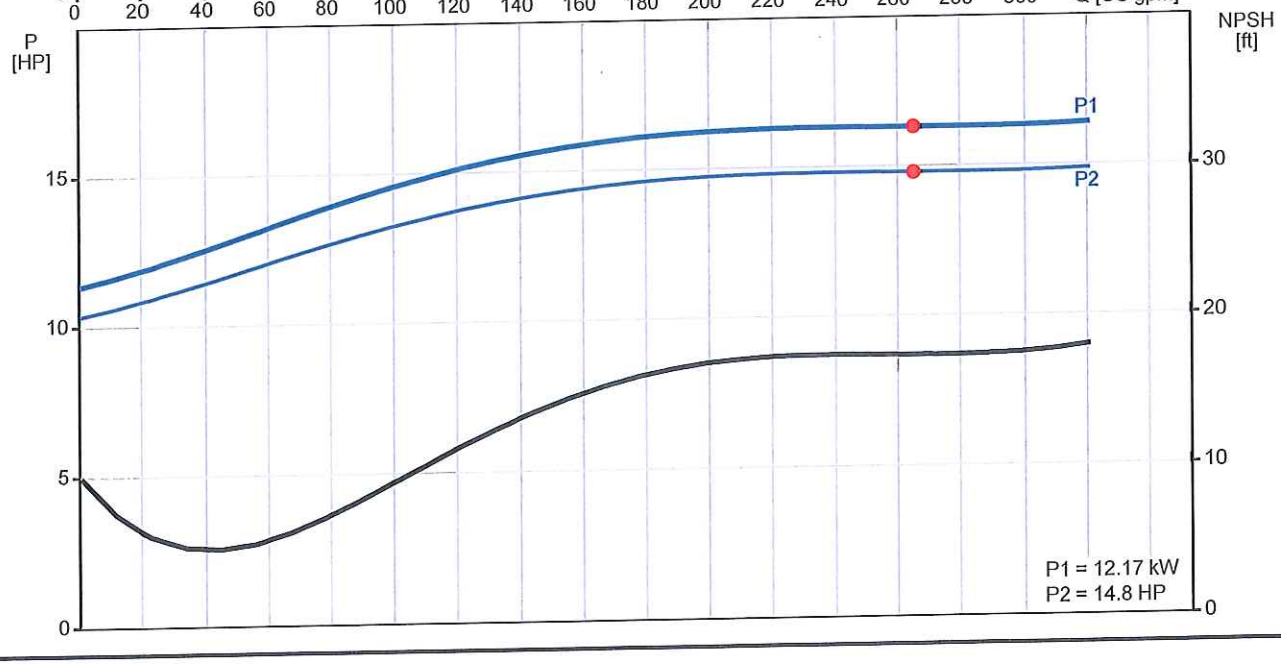

GRUNDFOS

Company name:
Created by:
Phone:

Date: 3/29/2017

Description	Value
General information:	
Product name:	SLV.30.A30.150.EX.2.61R.C
Product No.:	99030265
EAN:	5712605418283
Technical:	
Actual calculated flow:	264 US gpm
Max flow:	317 US gpm
Resulting head of the pump:	77.05 ft
Head max:	146.7 ft
Type of impeller:	Super Vortex
Maximum particle size:	3 1/8 in
Primary shaft seal:	SIC/SIC
Secondary shaft seal:	CARBON/CERAMICS
Approvals on nameplate:	CSA, FM
Curve tolerance:	ANSI/HI11.6:2012 3B
Cooling jacket:	without cooling jacket
Materials:	
Pump housing:	EN-GJL-250
Impeller:	EN-GJL-250
Motor:	EN-GJL-250
Installation:	
Maximum ambient temperature:	104 °F
Flange standard:	ANSI
Pump inlet:	80
Pump outlet:	80
Pressure stage:	PN 10
Maximum installation depth:	65.62 ft
Inst dry/wet:	SUBMERGED
Installation:	VERTICAL
Frame range:	D
Liquid:	
Pumped liquid:	Water
Maximum liquid temperature:	32 °F
Q_OpFluidTemp:	68 °F
Density:	62.4 lb/ft³
Kinematic viscosity:	1 cSt
Electrical data:	
Power input - P1:	12.6 kW
Rated power - P2:	15 HP
Main frequency:	60 Hz
Rated voltage:	3 x 230/460 V
Voltage tolerance:	+10/-10 %
Max starts per. hour:	20
Rated current:	37/20 A
Starting current:	240 A
Cos phi - power factor:	0.87
Cos phi - p.f. at 3/4 load:	0.84
Cos phi - p.f. at 1/2 load:	0.77
Rated speed:	3530 rpm
Motor efficiency at full load:	90.7 %
Motor efficiency at 3/4 load:	91.2 %
Motor efficiency at 1/2 load:	91.2 %
Number of poles:	2
Start. method:	star/delta

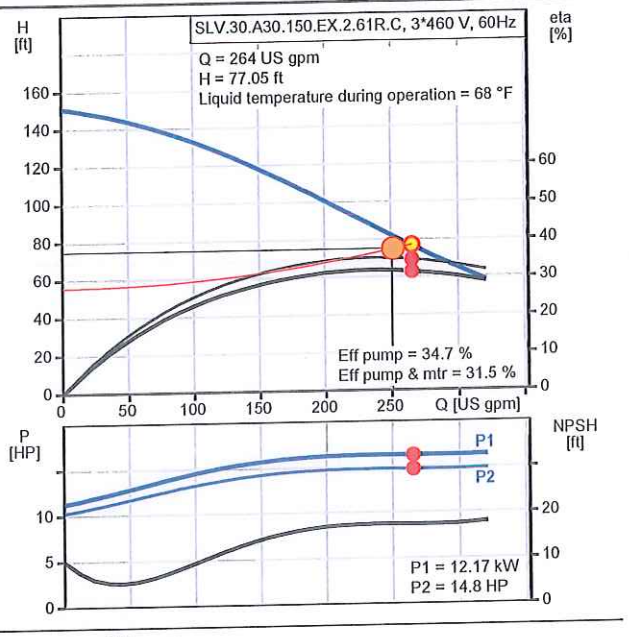

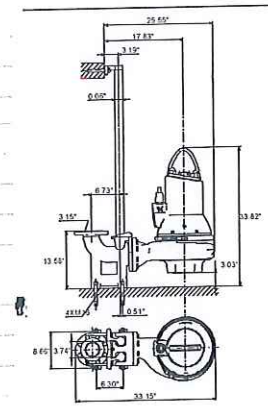

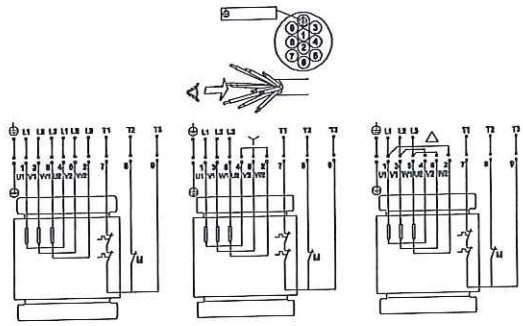

GRUNDFOS

Company name:
Created by:
Phone:

Date: 3/29/2017

Description	Value
Enclosure class (IEC 34-5):	IP68
Insulation class (IEC 85):	H
Explosion proof:	yes
Motor protection:	THERMAL SWITCH
Length of cable:	49 ft
Cable type:	SEOOW 600V
Controls:	
Additional I/O:	N
Moisture sensor:	with moisture sensors
Water-in-oil sensor:	without water-in-oil sensor
Others:	
Net weight:	394 lb

Company name:
Created by:
Phone:

Date: 3/29/2017

99030265 SLV.30.A30.150.EX.2.61R.C 60 Hz

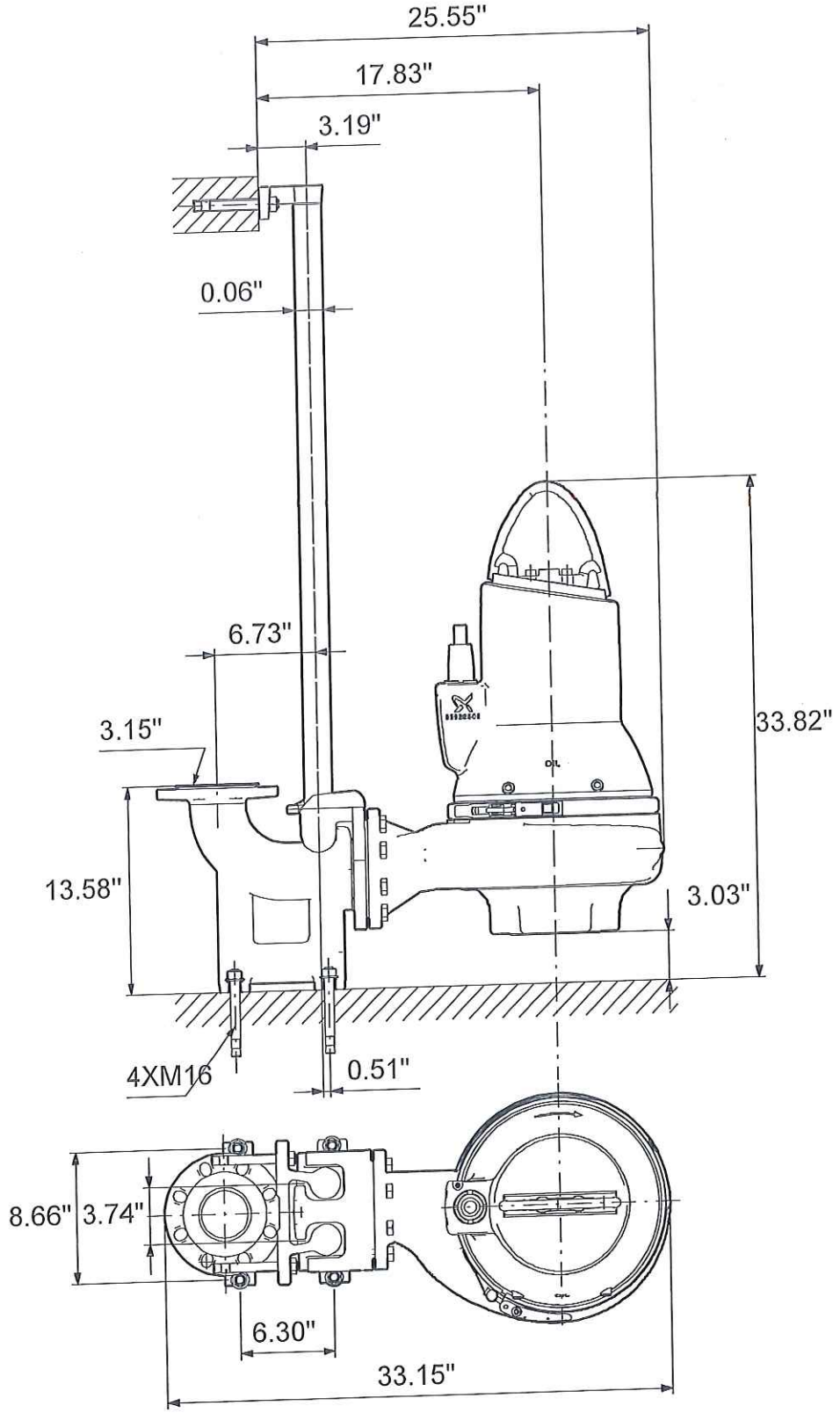

Note! All units are in [mm] unless otherwise stated.
Disclaimer: This simplified dimensional drawing does not show all details.

Company name:
Created by:
Phone:

Date: 3/29/2017

99030265 SLV.30.A30.150.EX.2.61R.C 60 Hz

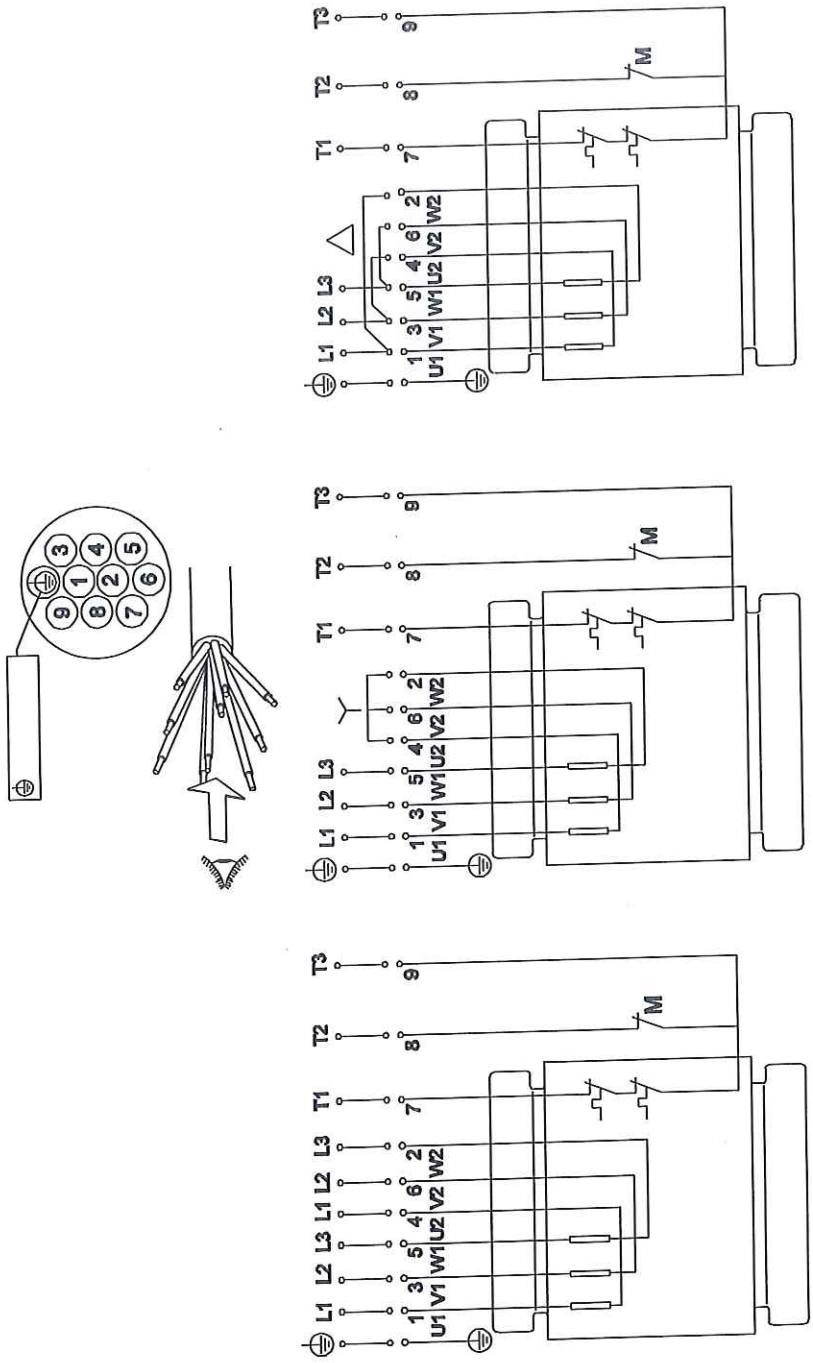

All units are [mm] unless otherwise presented.

LEGOLAND WINDSOR SEWER (2015)			
PARK	**HOTEL**	**TOTAL (M3)**	**TOTAL GAL**
2,363.00	691.00	3,054.00	806,781.29
7,966.00	1,665.00	9,631.00	2,544,240.53
11,008.00	1,130.00	12,138.00	3,206,519.74
9,080.00	4,020.00	13,100.00	3,460,653.20
11,434.00	2,417.00	13,851.00	3,659,046.37
10,896.00	2,562.00	13,458.00	3,555,226.78
11,973.00	3,363.00	15,336.00	4,051,341.79
9,621.00	2,834.00	12,455.00	3,290,262.26
9,325.00	2,469.00	11,794.00	3,115,644.57
8,788.00	1,935.00	10,723.00	2,832,716.36
3,087.00	2,606.00	5,693.00	1,503,931.20
1,643.00	2,113.00	3,756.00	992,230.03
		TOTAL ANNUAL	33,018,594.11
		TOTAL GPD	90,461.90