LEGOLAND NEW YORK

TOWN OF GOSHEN
ORANGE COUNTY, NEW YORK
JULY 21, 2016

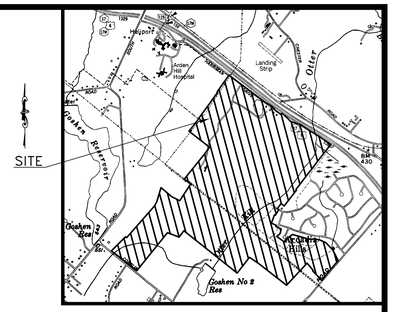

LOCATION PLAN
1 INCH = 2,000± FEET
TAKEN FROM NYS DOT DIGITAL RASTER QUADRANGLES FOR GOSHEN AND WARWICK

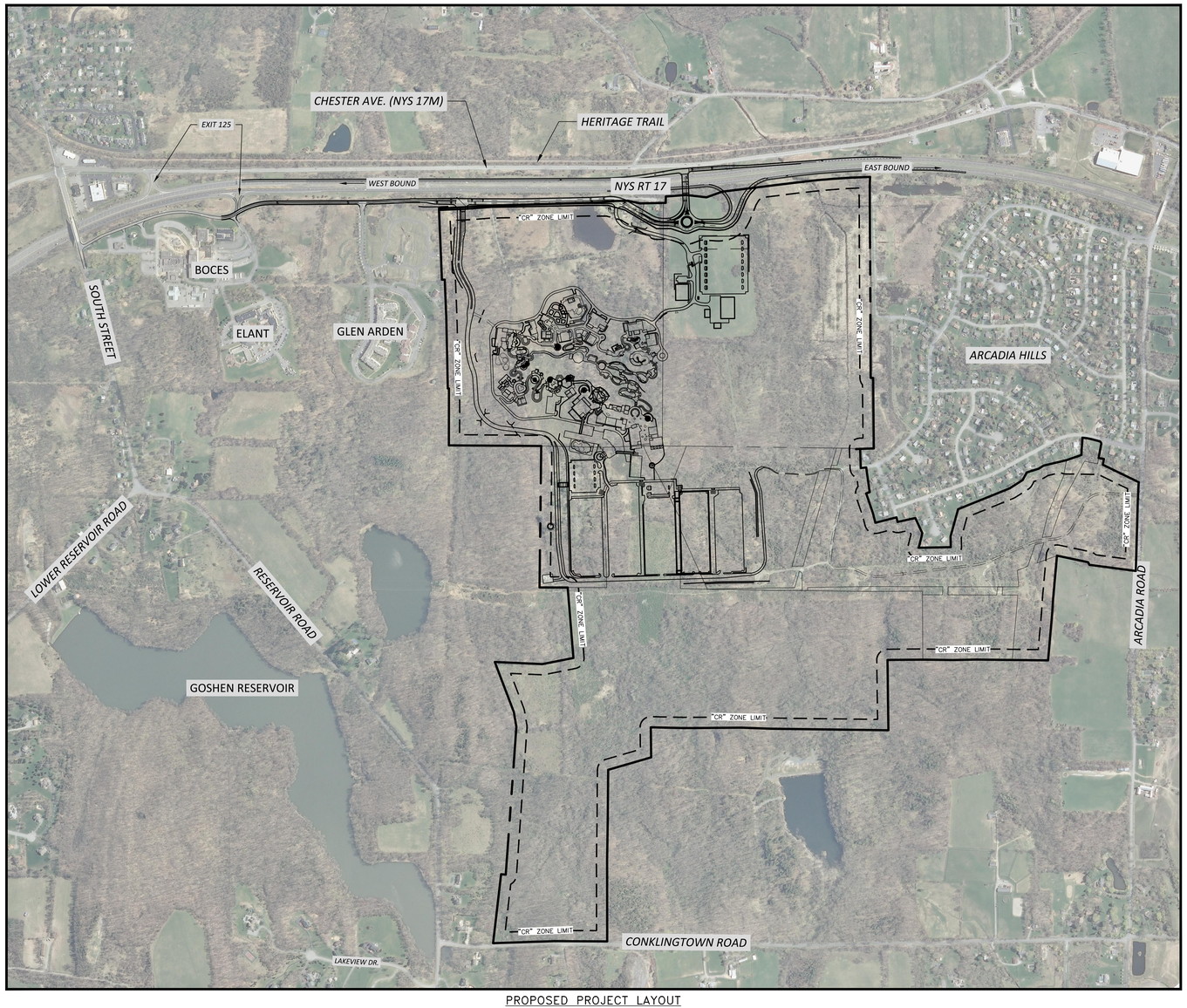

PROPOSED PROJECT LAYOUT
1 INCH = 400± FEET
ORTHOIMAGERY DATED 2013 TAKEN FROM NYS GIS CLEARING HOUSE

PROJECT APPLICANT
MERLIN ENTERTAINMENTS GROUP

PROJECT ENGINEER AND PLANNER
LANC & TULLY ENGINEERING AND SURVEYING, P.C.
POST OFFICE BOX 687
GOSHEN, NEW YORK 10924
(845) 294-3700

PARK MASTER PLANNER & ARCHITECT
FORREC
219 DUFFERIN STREET SUITE 100C
TORONTO ONTARIO CANADA M6K 3J1

PROJECT TRAFFIC ENGINEER
MASER CONSULTING, P.A.
11 BRADHURST AVENUE
HAWTHORNE, NY 10532
(914) 347-7500

PROJECT ATTORNEY
DRAKE LOEB, PLLC
555 HUDSON VALLEY AVENUE, SUITE 100
NEW WINDSOR, NY 12553
(845) 561-0550

DRAWING INDEX

SHEET No.	SHEET TITLE
C 1 OF 40	TITLE SHEET
C 2 OF 40	OVERALL SITE CONCEPT PLAN
C 3 OF 40	EXISTING CONDITIONS MAP 1
C 4 OF 40	EXISTING CONDITIONS MAP 2
C 5 OF 40	SITE PLAN - 200 SCALE
C 6 OF 40	SITE PLAN - 100 SCALE SHEET 1 OF 3
C 7 OF 40	SITE PLAN - 100 SCALE SHEET 2 OF 3
C 8 OF 40	SITE PLAN - 100 SCALE SHEET 3 OF 3
C 9 OF 40	OVERALL WATER AND SEWER SYSTEMS MAP
C 10 OF 40	GRADING AND UTILITY PLAN SHEET 1 OF 7
C 11 OF 40	GRADING AND UTILITY PLAN SHEET 2 OF 7
C 12 OF 40	GRADING AND UTILITY PLAN SHEET 3 OF 7
C 13 OF 40	GRADING AND UTILITY PLAN SHEET 4 OF 7
C 14 OF 40	GRADING AND UTILITY PLAN SHEET 5 OF 7
C 15 OF 40	GRADING AND UTILITY PLAN SHEET 6 OF 7
C 16 OF 40	GRADING AND UTILITY PLAN SHEET 7 OF 7
C 17 OF 40	STORMWATER SYSTEM LAYOUT SHEET 1 OF 3
C 18 OF 40	STORMWATER SYSTEM LAYOUT SHEET 2 OF 3
C 19 OF 40	STORMWATER SYSTEM LAYOUT SHEET 3 OF 3
C 20 OF 40	EROSION AND SEDIMENT CONTROL PLAN 1 OF 3
C 21 OF 40	EROSION AND SEDIMENT CONTROL PLAN 2 OF 3
C 22 OF 40	EROSION AND SEDIMENT CONTROL PLAN 3 OF 3
C 23 OF 40	EROSION AND SEDIMENT CONTROL DETAILS
C 24 OF 40	PROFILE: GUEST ENTRANCE ROAD PART 1
C 25 OF 40	PROFILE: GUEST ENTRANCE ROAD PART 2
C 26 OF 40	PROFILE: BACK OF HOUSE ENTRANCE ROAD
C 27 OF 40	PROFILE: INTERIOR PARK SERVICE ROAD
C 28 OF 40	PROFILE: LEGOLAND SANITARY SEWER FORCEMAIN
C 29 OF 40	PROFILE: ARCADIA HILLS REPLACEMENT SANITARY SEWER FORCEMAIN
C 30 OF 40	ROADWAY & PARKING AREA LIGHTING 1 OF 4
C 31 OF 40	ROADWAY & PARKING AREA LIGHTING 2 OF 4
C 32 OF 40	ROADWAY & PARKING AREA LIGHTING 3 OF 4
C 33 OF 40	ROADWAY & PARKING AREA LIGHTING 4 OF 4
C 34 OF 40	CONSTRUCTION DETAILS 1
C 35 OF 40	CONSTRUCTION DETAILS 2
C 36 OF 40	DRAINAGE DETAILS 1
C 37 OF 40	DRAINAGE DETAILS 2
C 38 OF 40	TYPICAL AQUASTORE WATER TANK DETAILS
C 39 OF 40	WATER BOOSTER STATION DETAILS
C 40 OF 40	SEWER PUMP STATION DETAILS
L131	PAVING PLAN
L132	PAVING PLAN
L133	PAVING PLAN
L134	PAVING PLAN
L135	PAVING PLAN
L136	PAVING PLAN
L137	PAVING PLAN
L141	TREE PLANTING PLAN
L142	TREE PLANTING PLAN
L143	TREE PLANTING PLAN
L144	TREE PLANTING PLAN
L145	TREE PLANTING PLAN
L146	TREE PLANTING PLAN
L147	TREE PLANTING PLAN
L141s	SHRUBS PLANTING PLAN
L142s	SHRUBS PLANTING PLAN
L143s	SHRUBS PLANTING PLAN
L144s	SHRUBS PLANTING PLAN
L145s	SHRUBS PLANTING PLAN
L146s	SHRUBS PLANTING PLAN
L147s	SHRUBS PLANTING PLAN
L151	FENCE & RAILING PLAN
L152	FENCE & RAILING PLAN
L153	FENCE & RAILING PLAN
L154	FENCE & RAILING PLAN
L155	FENCE & RAILING PLAN
L156	FENCE & RAILING PLAN
L157	FENCE & RAILING PLAN
L191	LIGHTING PLAN
L192	LIGHTING PLAN
L193	LIGHTING PLAN
L194	LIGHTING PLAN
L195	LIGHTING PLAN
L196	LIGHTING DETAILS
L197	LIGHTING DETAILS
L198	LIGHTING DETAILS
L541	PLANTING DETAILS

COPYRIGHT 2016, LANC & TULLY, P.C.

Dig Safely. New York. Call 811 before you dig

COPIES FROM THE ORIGINAL OF THIS DOCUMENT NOT MARKED WITH AN ORIGINAL OF THE PROFESSIONAL ENGINEER'S AND/OR LAND SURVEYOR'S STAMP OR EMBOSSED SEAL SHALL NOT BE CONSIDERED VALID, TRUE COPIES.

UNAUTHORIZED ALTERATION OR ADDITION TO THIS DOCUMENT IS A VIOLATION OF SECTION 7209-2 OF THE NEW YORK STATE EDUCATION LAW.

L&T LANC & TULLY
ENGINEERING AND SURVEYING, P.C.
P.O. Box 687, Rt. 207
Goshen, N.Y. 10924
(845) 294-3700

LEGOLAND NEW YORK
TOWN OF GOSHEN
ORANGE COUNTY, NEW YORK

REVISIONS
SEPTEMBER 1, 2016
NOVEMBER 3, 2016
MAY 18, 2017

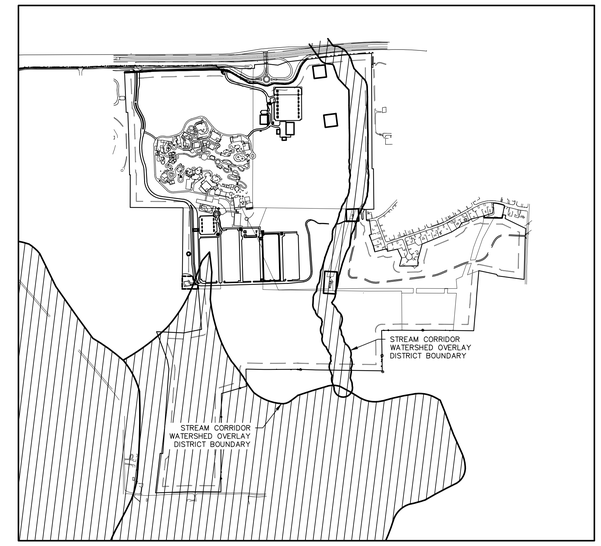

TOWN OF GOSHEN STREAM CORRIDOR AND RESERVOIR WATERSHED OVERLAY DISTRICT

1 INCH = 1,000± FEET

TAKEN FROM TOWN OF GOSHEN ZONING OVERLAY MAP

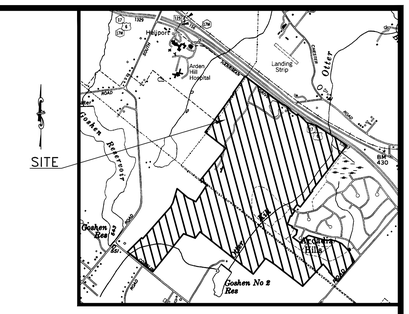

LOCATION PLAN

1 INCH = 2,000± FEET

TAKEN FROM NYS DOT DIGITAL RASTER QUADRANGLES FOR GOSHEN AND WARWICK

NOTES:

1. EXISTING CONDITIONS TAKEN FROM MAP ENTITLED "SURVEY PREPARED FOR LEGOLAND NEW YORK" PREPARED BY LANC & TULLY ENGINEERING AND SURVEYING, P.C., DATED AUGUST 2016.
2. WETLANDS DELINEATED BY ECOLOGICAL SOLUTIONS, LLC JUNE 2016 AND FIELD LOCATED BY LANC & TULLY ENGINEERING AND SURVEYING, P.C. JUNE 2016.

TABLE OF ZONING REQUIREMENTS

TOWN OF GOSHEN

RURAL (RU)
HAMLET RESIDENTIAL (HR)
COMMERCIAL RECREATION OVERLAY (CR)*

MINIMUM	"RU" ZONING DISTRICT AQ3 OVERLAY REQUIRED #	"RU" ZONING DISTRICT AQ6 OVERLAY REQUIRED #	"HR" ZONING DISTRICT REQUIRED	"CR" OVERLAY ZONING DISTRICT REQUIRED	PROPOSED LEGOLAND
LOT AREA	3 ACRES	6 ACRES	SUBJECT TO USE TABLE AND HR DISTRICT DIMENSIONAL REQUIREMENTS. SETBACKS ESTABLISHED AT THE TIME OF SITE PLAN APPROVAL.		507.431± AC. **
ROAD FRONTAGE	150 FEET	200 FEET		500 FEET	HARRIMAN DR. 2,000± FT. ARCADIA RD. 886± FT. CONKLINGTOWN RD. 1,050± FT.
FRONT YARD SETBACK ON TOWN ROAD	30 FT.	30 FT.		50 FT.	276± FT. (BOH SECURITY BOOTH)
FRONT YARD SETBACK ON COUNTY/STATE ROAD	50 FT.	50 FT.		50 FT.	
SIDE YARD SETBACK	20 FT.	30 FT.		50 FT.	227± FT. (HOTEL)
REAR YARD SETBACK	30 FT.	50 FT.		50 FT.	227± FT. (HOTEL)
MAXIMUM					
IMPERVIOUS SURFACE COVERAGE	15%	10%	N/A	25%	14.5%
BUILDING HEIGHT	35 FT.	35 FT.	35 FT.	100 FT.	65± FT.
FOOTPRINT FOR NON-RESIDENTIAL STRUCTURES	N/A	N/A	10,000 SF.	100,000 SF.	N/A

* COMMERCIAL RECREATION OVERLAY ZONE SUBJECT TO ADOPTION BY TOWN BOARD
** PROPOSED LOT AREA DEPICTS REMAINING LANDS AFTER ACCOUNTING FOR PROPOSED OFFERS OF DEDICATIONS AND SUBDIVISIONS
# SUBJECT TO ENVIRONMENTAL CONTROL FORMULA

APPLICABLE OVERLAY DISTRICTS:

AQ-3, AQ6
FLOODPLAIN & PONDING AREA OVERLAY
STREAM CORRIDOR AND RESERVOIR WATERSHED OVERLAY
SCENIC ROAD CORRIDOR OVERLAY

COPYRIGHT 2016, LANC & TULLY, P.C.

LANC & TULLY
ENGINEERING AND SURVEYING, P.C.
P.O. Box 667, Rt. 207
Goshen, N.Y. 10924
(845) 294-3700

MERLIN ENTERTAINMENTS

FORREC

MASER CONSULTING P.A.

OVERALL SITE CONCEPT PLAN FOR

LEGOLAND NEW YORK

TOWN OF GOSHEN
ORANGE COUNTY, NEW YORK

Revisions:

No.	Description	Issue Date
1	PLAN DEVELOPMENT	SEPTEMBER 1, 2016
2	PLAN DEVELOPMENT	NOVEMBER 3, 2016
3	FEIS SITEPLAN	MAY 18, 2017

CAD File:	160042-SITEPLAN
Layout:	OVERALL 300
Drawn By: MK	Checked By: JOR
Scale: 1" = 300'	Project No.: 16-0042
Tax Map No.:	SEE ABOVE
Date:	JULY 21, 2016
Sheet/Drawing No.:	C 2 OF 40

RECORD OWNERS:

GOSHEN LAND OWNER LLC
152 W 57TH ST FL 19TH
NEW YORK, NY 10014

L. 13837 P. 1101
11 - 1 - 46
15 - 1 - 59

FINI BROTHERS
P.O. BOX 998
GOSHEN, NY 10924

L. 2378 P. 322
11 - 1 - 58

L. 2521 P. 105
11 - 1 - 49.2

PCC RESERVOIR LLC
173 WEST STREET
WARWICK, NY 10990

L. 14015 P. 1047
11 - 1 - 45

BRIAN CAREY
JOAN MARIE CAREY
7 OLD TOWN ROAD
MONROE, NY 10950

L. 11371 P. 629
11 - 1 - 47

TOWN OF GOSHEN
41 WEBSTER AVENUE
GOSHEN, NY 10924

L. 2295 P. 705
11 - 1 - 60
11 - 1 - 62
11 - 1 - 63
11 - 1 - 64
11 - 1 - 65
11 - 1 - 66
11 - 1 - 67
11 - 1 - 68
11 - 1 - 69

GRAPHIC SCALE

300 0 150 300 600 1200

(IN FEET)
1 inch = 300 ft.

PARKING CALCULATION TABLE

LOCATION	PROVIDED	TOTAL PROVIDED
MAIN DAY GUEST PARKING	70 BUS PARKING 3,260 ON-GRADE CAR PARKING SPACES 650 PARKING DECK CAR PARKING SPACES 52 ADA ACCESSIBLE CAR PARKING SPACES	70 BUS 3,962 CAR
HOTEL GUEST PARKING	244 CAR PARKING ON-GRADE 8 ACCESSIBLE CAR PARKING SPACES ON-GRADE	252 CAR
EMPLOYEE PARKING	570 CAR PARKING - MAIN LOT 168 LANDBANKED CAR PARKING - MAIN LOT 18 CAR PARKING - VIP ADMIN BUILDING LOT 16 ACCESSIBLE CAR PARKING - MAIN LOT 1 ACCESSIBLE CAR SPACE - VIP ADMIN BUILDING LOT	773 EMPLOYEE / ADMIN. CARS
	PROPOSED TOTAL=	70 BUS 4,990 CAR

ACCESSIBLE PARKING SPACE REQUIREMENTS

Main Day Guest Parking = 3,962 Total Spaces Provided
ADA Requires: 20 spaces required up to 1,000 spaces + 1 per 100 spaces = 50 Accessible spaces required.
Provided = 52 Total Accessible spaces

Hotel Parking = 252 Total Spaces Provided
ADA Requires: 201-300 spaces requires 7 spaces be provided.
Provided = 8 Accessible spaces

Employee Parking = 773 Total Spaces Provided
ADA Requires: 2% of total shall be accessible. 773 x 2% = 16 Accessible spaces required.
Provided = 17 Accessible spaces

LEGEND

PROPERTY LINE
ADJOINING PARCEL LINES
590 EXISTING MAJOR CONTOUR
EXISTING MINOR CONTOUR
EXISTING EASEMENT
EXISTING WATERCOURSE
EXISTING FEDERAL WETLAND BOUNDARY
EXISTING NYS WETLAND BOUNDARY
STREAM CORRIDOR AND RESERVOIR WATERSHED OVERLAY ZONING DISTRICT LIMIT
FLOODPLAIN AND PONDING AREA OVERLAY
590 PROPOSED MAJOR CONTOUR
588 PROPOSED MINOR CONTOUR
PROPOSED EDGE OF PAVEMENT
PROPOSED RETAINING WALL
PROPOSED DRAINAGE
PROPOSED SWALE
PROPOSED SANITARY SEWER
PROPOSED WATER MAIN
PROPOSED HYDRANT/VALVE
PROPOSED DRAINAGE MANHOLE
PROPOSED FLAT INLET CATCH BASINS
PROPOSED CURB INLET CATCH BASIN

COPIES FROM THE ORIGINAL OF THIS DOCUMENT NOT MARKED WITH AN ORIGINAL OF THE PROFESSIONAL ENGINEER'S AND/OR LAND SURVEYOR'S STAMP OR EMBOSSED SEAL SHALL NOT BE CONSIDERED VALID, TRUE COPIES.

UNAUTHORIZED ALTERATION OR ADDITION TO THIS DOCUMENT IS A VIOLATION OF SECTION 7209-2 OF THE NEW YORK STATE EDUCATION LAW.

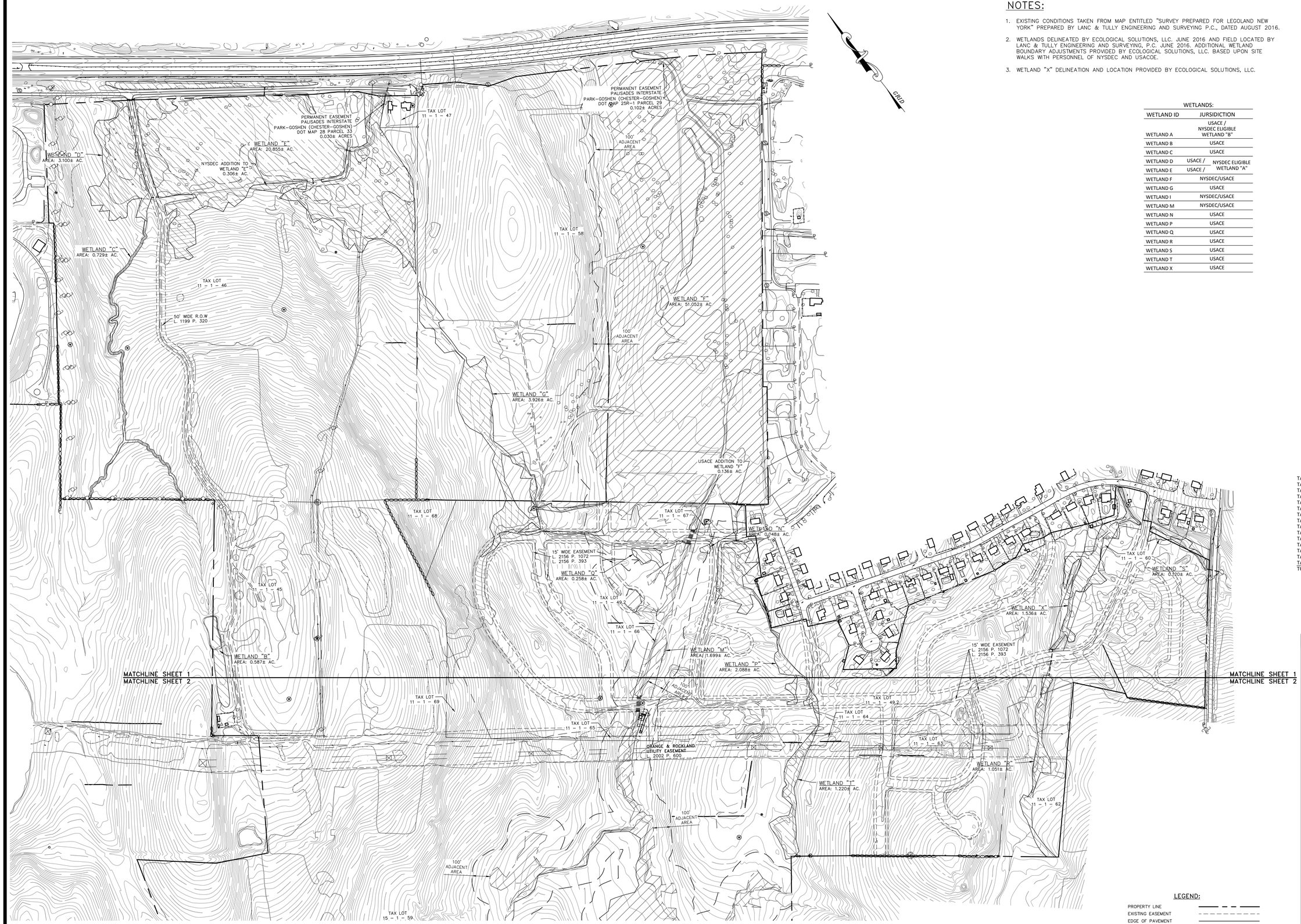

NOTES:

1. EXISTING CONDITIONS TAKEN FROM MAP ENTITLED "SURVEY PREPARED FOR LEGOLAND NEW YORK" PREPARED BY LANC & TULLY ENGINEERING AND SURVEYING P.C., DATED AUGUST 2016.
2. WETLANDS DELINEATED BY ECOLOGICAL SOLUTIONS, LLC. JUNE 2016 AND FIELD LOCATED BY LANC & TULLY ENGINEERING AND SURVEYING, P.C. JUNE 2016. ADDITIONAL WETLAND BOUNDARY ADJUSTMENTS PROVIDED BY ECOLOGICAL SOLUTIONS, LLC. BASED UPON SITE WALKS WITH PERSONNEL OF NYSDEC AND USACOE.
3. WETLAND "X" DELINEATION AND LOCATION PROVIDED BY ECOLOGICAL SOLUTIONS, LLC.

WETLANDS:

WETLAND ID	JURSIDICTION
WETLAND A	USACE / NYSDEC ELIGIBLE WETLAND "B"
WETLAND B	USACE
WETLAND C	USACE
WETLAND D	USACE / NYSDEC ELIGIBLE
WETLAND E	USACE / WETLAND "A"
WETLAND F	NYSDEC/USACE
WETLAND G	USACE
WETLAND I	NYSDEC/USACE
WETLAND M	NYSDEC/USACE
WETLAND N	USACE
WETLAND P	USACE
WETLAND Q	USACE
WETLAND R	USACE
WETLAND S	USACE
WETLAND T	USACE
WETLAND X	USACE

RECORD OWNERS:

PCC RESERVOIR LLC
173 WEST STREET
WARWICK, NEW YORK 10990

L. 14015 P. 1047
11 – 1 – 45

GOSHEN LAND OWNER LLC
152 W 57TH STREET FL 19TH
NEW YORK, NEW YORK 10014

L. 13837 P. 1101
11 – 1 – 46
15 – 1 – 59
FILED MAP NO. 8629
LOT 2

BRIAN CAREY
7 OLD TOWN ROAD
MONROE, NEW YORK 10950

L. 11371 P. 629
11 – 1 – 47

FINI BROTHERS
P.O. BOX 998
GOSHEN, NEW YORK 10924

11 – 1 – 49.2
L. 2521 P. 105
11 – 1 – 58
L. 2378 P. 322

TOWN OF GOSHEN
41 WEBSTER AVENUE
GOSHEN, NEW YORK 10924

L. 2295 P. 705
11 – 1 – 60
11 – 1 – 62
11 – 1 – 63
11 – 1 – 64
11 – 1 – 65
11 – 1 – 66
11 – 1 – 67
11 – 1 – 68
11 – 1 – 69

AREAS:

TAX LOT 11 - 1 - 45	18.243± AC.
TAX LOT 11 - 1 - 46	104.883± AC.
TAX LOT 11 - 1 - 47	0.803± AC.
TAX LOT 11 - 1 - 58	108.735± AC.
TAX LOT 11 - 1 - 49.2	103.584± AC.
TAX LOT 15 - 1 - 59	166.723± AC.
TAX LOT 11 - 1 - 60	2.689± AC.
TAX LOT 11 - 1 - 62	7.662± AC.
TAX LOT 11 - 1 - 63	0.805± AC.
TAX LOT 11 - 1 - 64	1.342± AC.
TAX LOT 11 - 1 - 65	0.501± AC.
TAX LOT 11 - 1 - 66	2.132± AC.
TAX LOT 11 - 1 - 67	0.191± AC.
TAX LOT 11 - 1 - 68	2.094± AC.
TAX LOT 11 - 1 - 69	1.565± AC.
TOTAL:	521.952± AC.

COPYRIGHT 2016, LANC & TULLY, P.C.

LANC & TULLY
ENGINEERING AND SURVEYING, P.C.
P.O. Box 687, Rt. 207
Goshen, N.Y. 10924
(845) 294-3700

MERLIN ENTERTAINMENTS

FORREC

MASER CONSULTING P.A.

EXISTING CONDITIONS MAP SHEET 1 OF 2

LEGOLAND NEW YORK

TOWN OF GOSHEN
ORANGE COUNTY, NEW YORK

Revisions:

No.	Description	Issue Date
1	PLAN DEVELOPMENT	SEPTEMBER 1, 2016
2	PLAN DEVELOPMENT	NOVEMBER 3, 2016
3	FEIS SITEPLAN	MAY 18, 2017

GRAPHIC SCALE

200 0 100 200 400 800

(IN FEET)
1 inch = 200 ft.

LEGEND:

PROPERTY LINE
EXISTING EASEMENT
EDGE OF PAVEMENT
TREE LINE
WATER
GRAVEL/BROKEN PAVEMENT
FENCE
TAX LOT LINE
STONE WALL
DEC WETLANDS
FEDERAL WETLANDS

CAD File:	160042-EX COND MAP
Layout:	EX 200_1
Drawn By: MK	Checked By: JOR
Scale: 1" = 200'	Project No.: 16-0042
Tax Map No.:	SEE SHEET 2
Date:	JULY 21, 2016
Sheet/Drawing No.:	C 3 OF 40

COPIES FROM THE ORIGINAL OF THIS DOCUMENT NOT MARKED WITH AN ORIGINAL OF THE PROFESSIONAL ENGINEER'S AND/OR LAND SURVEYOR'S STAMP OR EMBOSSED SEAL SHALL NOT BE CONSIDERED VALID, TRUE COPIES.

UNAUTHORIZED ALTERATION OR ADDITION TO THIS DOCUMENT IS A VIOLATION OF SECTION 7209-2 OF THE NEW YORK STATE EDUCATION LAW.

COPYRIGHT 2016, LANC & TULLY, P.C.

LANC & TULLY
ENGINEERING AND SURVEYING, P.C.
P.O. Box 687, Rt. 207
Goshen, N.Y. 10924
(845) 294-3700

MERLIN ENTERTAINMENTS

FORREC

MASER CONSULTING P.A.

EXISTING CONDITIONS MAP
SHEET 2 OF 2

LEGOLAND NEW YORK

TOWN OF GOSHEN
ORANGE COUNTY, NEW YORK

Revisions:

No.	Description	Issue Date
1	PLAN DEVELOPMENT	SEPTEMBER 1, 2016
2	PLAN DEVELOPMENT	NOVEMBER 3, 2016
3	FEIS SITEPLAN	MAY 18, 2017

LEGEND:

- PROPERTY LINE
- EXISTING EASEMENT
- EDGE OF PAVEMENT
- TREE LINE
- WATER
- GRAVEL/BROKEN PAVEMENT
- FENCE
- TAX LOT LINE
- STONE WALL
- DEC WETLANDS
- FEDERAL WETLANDS

GRAPHIC SCALE

200 0 100 200 400 800

(IN FEET)
1 inch = 200 ft.

CAD File: 160042-EX COND MAP	
Layout: EX 200_2	
Drawn By: MK	Checked By: JOR
Scale: 1" = 200'	Project No.: 16-0042
Tax Map No.: SEE SHEET 2	
Date: JULY 21, 2016	
Sheet/Drawing No.: C 4 OF 40	

COPIES FROM THE ORIGINAL OF THIS DOCUMENT NOT MARKED WITH AN ORIGINAL OF THE PROFESSIONAL ENGINEER'S AND/OR LAND SURVEYOR'S STAMP OR EMBOSSED SEAL SHALL NOT BE CONSIDERED VALID, TRUE COPIES.

UNAUTHORIZED ALTERATION OR ADDITION TO THIS DOCUMENT IS A VIOLATION OF SECTION 7209-2 OF THE NEW YORK STATE EDUCATION LAW.

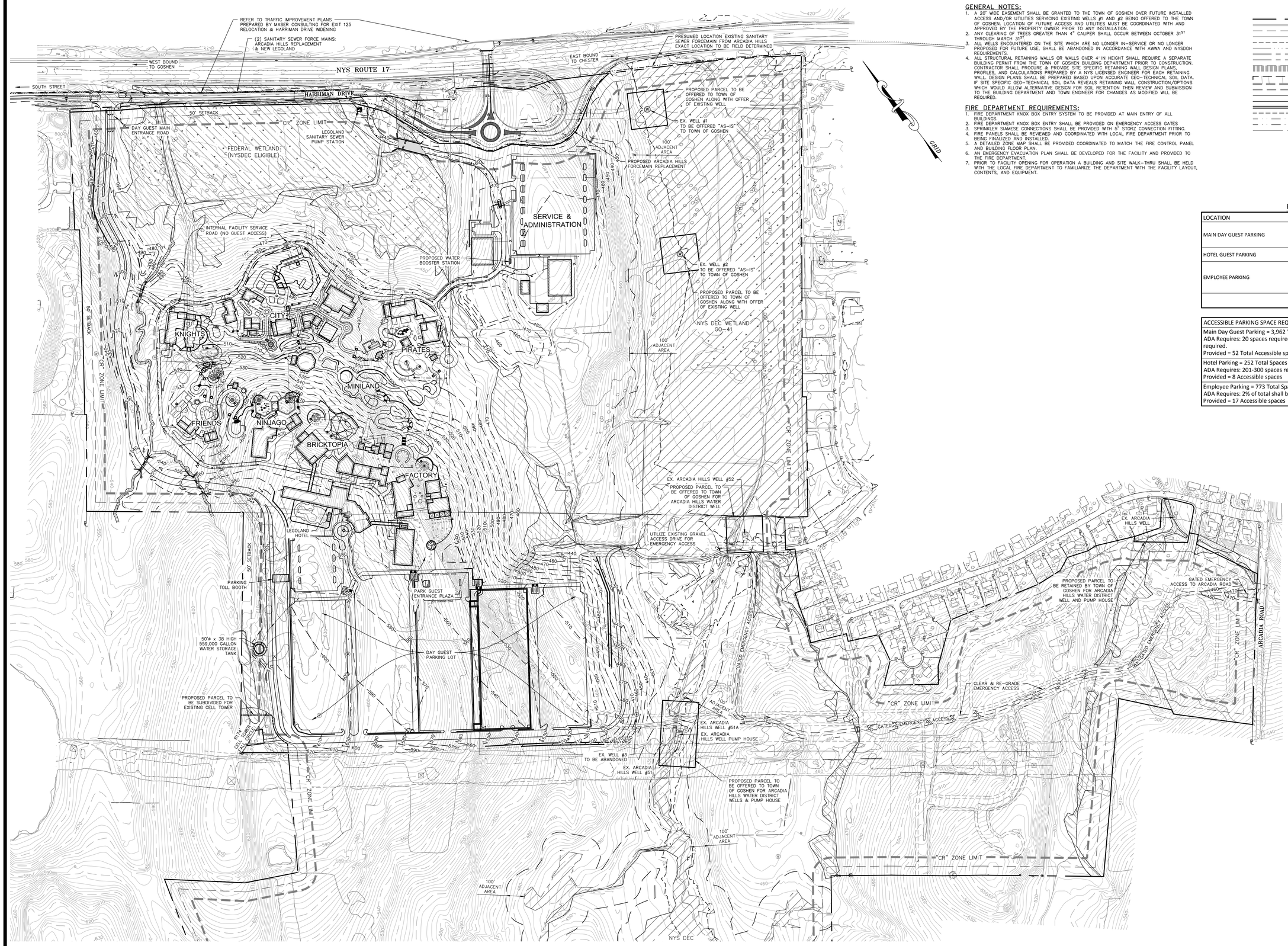

GENERAL NOTES:

1. A 20' WIDE EASEMENT SHALL BE GRANTED TO THE TOWN OF GOSHEN OVER FUTURE INSTALLED ACCESS AND/OR UTILITIES SERVICING EXISTING WELLS #1 AND #2 BEING OFFERED TO THE TOWN OF GOSHEN. LOCATION OF FUTURE ACCESS AND UTILITIES MUST BE COORDINATED WITH AND APPROVED BY THE PROPERTY OWNER PRIOR TO ANY INSTALLATION.
2. ANY CLEARING OF TREES GREATER THAN 4" CALIPER SHALL OCCUR BETWEEN OCTOBER 31ST THROUGH MARCH 31ST.
3. ALL WELLS ENCOUNTERED ON THE SITE WHICH ARE NO LONGER IN-SERVICE OR NO LONGER PROPOSED FOR FUTURE USE, SHALL BE ABANDONED IN ACCORDANCE WITH AWWA AND NYSDOH REQUIREMENTS.
4. ALL STRUCTURAL RETAINING WALLS OR WALLS OVER 4' IN HEIGHT SHALL REQUIRE A SEPARATE BUILDING PERMIT FROM THE TOWN OF GOSHEN BUILDING DEPARTMENT PRIOR TO CONSTRUCTION. CONTRACTOR SHALL PROCURE & PROVIDE SITE SPECIFIC RETAINING WALL DESIGN PLANS, PROFILES, AND CALCULATIONS PREPARED BY A NYS LICENSED ENGINEER FOR EACH RETAINING WALL. DESIGN PLANS SHALL BE PREPARED BASED UPON ACCURATE GEO-TECHNICAL SOIL DATA. IF SITE SPECIFIC GEO-TECHNICAL SOIL DATA REVEALS RETAINING WALL CONSTRUCTION/OPTIONS WHICH WOULD ALLOW ALTERNATIVE DESIGN FOR SOIL RETENTION THEN REVIEW AND SUBMISSION TO THE BUILDING DEPARTMENT AND TOWN ENGINEER FOR CHANGES AS MODIFIED WILL BE REQUIRED.

FIRE DEPARTMENT REQUIREMENTS:

1. FIRE DEPARTMENT KNOX BOX ENTRY SYSTEM TO BE PROVIDED AT MAIN ENTRY OF ALL BUILDINGS.
2. FIRE DEPARTMENT KNOX BOX ENTRY SHALL BE PROVIDED ON EMERGENCY ACCESS GATES
3. SPRINKLER SIAMESE CONNECTIONS SHALL BE PROVIDED WITH 5" STORZ CONNECTION FITTING.
4. FIRE PANELS SHALL BE REVIEWED AND COORDINATED WITH LOCAL FIRE DEPARTMENT PRIOR TO BEING FINALIZED AND INSTALLED.
5. A DETAILED ZONE MAP SHALL BE PROVIDED COORDINATED TO MATCH THE FIRE CONTROL PANEL AND BUILDING FLOOR PLAN.
6. AN EMERGENCY EVACUATION PLAN SHALL BE DEVELOPED FOR THE FACILITY AND PROVIDED TO THE FIRE DEPARTMENT.
7. PRIOR TO FACILITY OPENING FOR OPERATION A BUILDING AND SITE WALK-THRU SHALL BE HELD WITH THE LOCAL FIRE DEPARTMENT TO FAMILIARIZE THE DEPARTMENT WITH THE FACILITY LAYOUT, CONTENTS, AND EQUIPMENT.

LEGEND

- PROPERTY LINE
- ADJOINING PARCEL LINES
- EXISTING MAJOR CONTOUR (590)
- EXISTING MINOR CONTOUR
- EXISTING EASEMENT
- EXISTING WATERCOURSE
- EXISTING FEDERAL WETLAND BOUNDARY
- EXISTING NYS WETLAND BOUNDARY
- STREAM CORRIDOR AND RESERVOIR WATERSHED OVERLAY ZONING DISTRICT LIMIT
- FLOODPLAIN AND PONDING AREA OVERLAY
- PROPOSED MAJOR CONTOUR (590)
- PROPOSED MINOR CONTOUR (588)
- PROPOSED EDGE OF PAVEMENT
- PROPOSED RETAINING WALL
- PROPOSED DRAINAGE
- PROPOSED SWALE
- PROPOSED SANITARY SEWER
- PROPOSED WATER MAIN
- PROPOSED HYDRANT/VALVE
- PROPOSED DRAINAGE MANHOLE
- PROPOSED FLAT INLET CATCH BASINS
- PROPOSED CURB INLET CATCH BASIN

PARKING CALCULATION TABLE

LOCATION	PROVIDED	TOTAL PROVIDED
MAIN DAY GUEST PARKING	70 BUS PARKING 3,260 ON-GRADE CAR PARKING SPACES 650 PARKING DECK CAR PARKING SPACES 52 ADA ACCESSIBLE CAR PARKING SPACES	70 BUS 3,962 CAR
HOTEL GUEST PARKING	244 CAR PARKING ON-GRADE 8 ACCESSIBLE CAR PARKING SPACES ON-GRADE	252 CAR
EMPLOYEE PARKING	570 CAR PARKING - MAIN LOT 168 LANDBANKED CAR PARKING - MAIN LOT 18 CAR PARKING - VIP ADMIN BUILDING LOT 16 ACCESSIBLE CAR PARKING - MAIN LOT 1 ACCESSIBLE CAR SPACE - VIP ADMIN BUILDING LOT	773 EMPLOYEE / ADMIN. CARS
	PROPOSED TOTAL=	70 BUS 4,990 CAR

ACCESSIBLE PARKING SPACE REQUIREMENTS
Main Day Guest Parking = 3,962 Total Spaces Provided ADA Requires: 20 spaces required up to 1,000 spaces + 1 per 100 spaces = 50 Accessible spaces required. Provided = 52 Total Accessible spaces
Hotel Parking = 252 Total Spaces Provided ADA Requires: 201-300 spaces requires 7 spaces be provided. Provided = 8 Accessible spaces
Employee Parking = 773 Total Spaces Provided ADA Requires: 2% of total shall be accessible. 773 x 2% = 16 Accessible spaces required. Provided = 17 Accessible spaces

COPYRIGHT 2016, LANC & TULLY, P.C.

LANC & TULLY
ENGINEERING AND SURVEYING, P.C.
P.O. Box 687, Rt. 207
Goshen, N.Y. 10924
(845) 294-3700

MERLIN ENTERTAINMENTS
FORREC
MASER CONSULTING P.A.

SITE PLAN – 200 SCALE

LEGOLAND NEW YORK
TOWN OF GOSHEN
ORANGE COUNTY, NEW YORK

Revisions:

No.	Description	Issue Date
1	PLAN DEVELOPMENT	SEPTEMBER 1, 2016
2	PLAN DEVELOPMENT	NOVEMBER 3, 2016
3	FEIS SITEPLAN	MAY 18, 2017

CAD File:	160042-SITEPLAN
Layout:	SP 200
Drawn By: MK	Checked By: JOR
Scale: 1" = 200'	Project No.: 16-0042
Tax Map No.:	SEE SHEET 2
Date:	JULY 21, 2016
Sheet/Drawing No.:	C 5 OF 40

GRAPHIC SCALE
200 0 100 200 400 800
(IN FEET)
1 inch = 200 ft.

COPIES FROM THE ORIGINAL OF THIS DOCUMENT NOT MARKED WITH AN ORIGINAL OF THE PROFESSIONAL ENGINEER'S AND/OR LAND SURVEYOR'S STAMP OR EMBOSSED SEAL SHALL NOT BE CONSIDERED VALID, TRUE COPIES.

UNAUTHORIZED ALTERATION OR ADDITION TO THIS DOCUMENT IS A VIOLATION OF SECTION 7209-2 OF THE NEW YORK STATE EDUCATION LAW.

WEST BOUND TO GOSHEN

REFER TO TRAFFIC IMPROVEMENT PLANS PREPARED BY MASER CONSULTING FOR EXIT 125 RELOCATION & HARRIMAN DRIVE WIDENING

NYS ROUTE 17

(2) SANITARY SEWER FORCE MAINS: ARCADIA HILLS REPLACEMENT & NEW LEGOLAND

REFER TO TRAFFIC IMPROVEMENT PLANS PREPARED BY MASER CONSULTING FOR EXIT 125 RELOCATION & HARRIMAN DRIVE WIDENING

EAST BOUND TO CHESTER

OUTH STREET

HARRIMAN DRIVE

PROPOSED R.O.W.

50' SETBACK

"CR" ZONE LIMIT

LEGOLAND SANITARY SEWER PUMP STATION

PROPOSED PERMANENT FEDERAL WETLAND DISTURBANCE=0.063± AC.

PRESUMED LOCATION EXISTING SANITARY SEWER FORCEMAIN FROM ARCADIA HILLS EXACT LOCATION TO BE FIELD DETERMINED

PROPOSED PARCEL TO BE OFFERED TO TOWN OF GOSHEN ALONG WITH OFFER OF EXISTING WELL

EX. WELL #1 TO BE OFFERED "AS-IS" TO TOWN OF GOSHEN

DAY GUEST MAIN ENTRANCE ROAD

FEDERAL WETLAND (NYSDEC ELIGIBLE)

PROPOSED TEMPORARY FEDERAL WETLAND DISTURBANCE=0.026± AC.

PROPOSED PERMANENT FEDERAL WETLAND DISTURBANCE=0.179± AC.

PROPOSED ARCADIA HILLS FORCEMAIN REPLACEMENT

PORTION OF PARKING AREA TO BE LAND BANKED

100' ADJACENT AREA

APPROX. LIMITS OF FLOODPLAIN

738 STANDARD
+ 16 ACCESSIBLE SPOTS
=754 TOTAL PARKING

ADMINISTRATION

PROPOSED WATER BOOSTER STATION

EX. WELL #2 TO BE OFFERED "AS-IS" TO TOWN OF GOSHEN

PROPOSED PARCEL TO BE OFFERED TO TOWN OF GOSHEN ALONG WITH OFFER OF EXISTING WELL

NYS DEC WETLAND GO-41

PROPOSED PERMANENT FEDERAL WETLAND DISTURBANCE=0.039± AC.

CITY

KNIGHTS

PIRATES

MINILAND

FRIENDS

NINJAGO

BRICKTOPIA

FEDERAL WETLAND

PROPOSED DRY-BARREL WATERMAIN CONNECTION (VALVE NORMALLY CLOSED) 8" DIOD POLYETHYLENE PC 150

MATCHLINE SHEET 1
MATCHLINE SHEET 2

COPYRIGHT 2016, LANC & TULLY, P.C.

LEGEND

- PROPERTY LINE
- ADJOINING PARCEL LINES
- EXISTING MAJOR CONTOUR
- EXISTING MINOR CONTOUR
- EXISTING EASEMENT
- EXISTING WATERCOURSE
- EXISTING FEDERAL WETLAND BOUNDARY
- EXISTING NYS WETLAND BOUNDARY
- STREAM CORRIDOR AND RESERVOIR WATERSHED OVERLAY ZONING DISTRICT LIMIT
- FLOODPLAIN AND PONDING AREA OVERLAY
- PROPOSED MAJOR CONTOUR
- PROPOSED MINOR CONTOUR
- PROPOSED EDGE OF PAVEMENT
- PROPOSED RETAINING WALL
- PROPOSED DRAINAGE
- PROPOSED SWALE
- PROPOSED SANITARY SEWER
- PROPOSED WATER MAIN
- PROPOSED HYDRANT/VALVE
- PROPOSED DRAINAGE MANHOLE
- PROPOSED FLAT INLET CATCH BASINS
- PROPOSED CURB INLET CATCH BASIN

GRAPHIC SCALE

50 0 50 100 200 400

(IN FEET)
1 inch = 100 ft.

GRID

COPIES FROM THE ORIGINAL OF THIS DOCUMENT NOT MARKED WITH AN ORIGINAL OF THE PROFESSIONAL ENGINEER'S AND/OR LAND SURVEYOR'S STAMP OR EMBOSSED SEAL SHALL NOT BE CONSIDERED VALID, TRUE COPIES.

UNAUTHORIZED ALTERATION OR ADDITION TO THIS DOCUMENT IS A VIOLATION OF SECTION 7209-2 OF THE NEW YORK STATE EDUCATION LAW.

LANC & TULLY
ENGINEERING AND SURVEYING, P.C.
P.O. Box 687, Rt. 207
Goshen, N.Y. 10924
(845) 294-3700

MERLIN ENTERTAINMENTS

FORREC

MASER CONSULTING P.A.

SITE PLAN – 100 SCALE
SHEET 1 OF 3

LEGOLAND NEW YORK

TOWN OF GOSHEN
ORANGE COUNTY, NEW YORK

Revisions:

No.	Description	Issue Date
1	PLAN DEVELOPMENT	SEPTEMBER 1, 2016
2	PLAN DEVELOPMENT	NOVEMBER 3, 2016
3	FEIS SITEPLAN	MAY 18, 2017

CAD File: 160042-SITEPLAN	
Layout: SP 100 1_3	
Drawn By: MK	Checked By: JOR
Scale: 1" = 100'	Project No.: 16-0042
Tax Map No.: SEE SHEET 2	
Date: JULY 21, 2016	
Sheet/Drawing No.: C 6 OF 40	

COPYRIGHT 2016, LANC & TULLY, P.C.

LEGEND

- PROPERTY LINE
- ADJOINING PARCEL LINES
- EXISTING MAJOR CONTOUR
- EXISTING MINOR CONTOUR
- EXISTING EASEMENT
- EXISTING WATERCOURSE
- EXISTING FEDERAL WETLAND BOUNDARY
- EXISTING NYS WETLAND BOUNDARY
- STREAM CORRIDOR AND RESERVOIR
- WATERSHED OVERLAY ZONING DISTRICT LIMIT
- FLOODPLAIN AND PONDING AREA OVERLAY
- PROPOSED MAJOR CONTOUR
- PROPOSED MINOR CONTOUR
- PROPOSED EDGE OF PAVEMENT
- PROPOSED RETAINING WALL
- PROPOSED DRAINAGE
- PROPOSED SWALE
- PROPOSED SANITARY SEWER
- PROPOSED WATER MAIN
- PROPOSED HYDRANT/VALVE
- PROPOSED DRAINAGE MANHOLE
- PROPOSED FLAT INLET CATCH BASINS
- PROPOSED CURB INLET CATCH BASIN

GRID

GRAPHIC SCALE

100 0 50 100 200 400

(IN FEET)
1 inch = 100 ft.

COPIES FROM THE ORIGINAL OF THIS DOCUMENT NOT MARKED WITH AN ORIGINAL OF THE PROFESSIONAL ENGINEER'S AND/OR LAND SURVEYOR'S STAMP OR EMBOSSED SEAL SHALL NOT BE CONSIDERED VALID, TRUE COPIES.

UNAUTHORIZED ALTERATION OR ADDITION TO THIS DOCUMENT IS A VIOLATION OF SECTION 7209-2 OF THE NEW YORK STATE EDUCATION LAW.

LANC & TULLY
ENGINEERING AND SURVEYING, P.C.
P.O. Box 687, Rt. 207
Goshen, N.Y. 10924
(845) 294-3700

MERLIN ENTERTAINMENTS

FORREC

MASER CONSULTING P.A.

SITE PLAN – 100 SCALE
SHEET 2 OF 3

LEGOLAND NEW YORK

TOWN OF GOSHEN
ORANGE COUNTY, NEW YORK

Revisions:

No.	Description	Issue Date
1	PLAN DEVELOPMENT	SEPTEMBER 1, 2016
2	PLAN DEVELOPMENT	NOVEMBER 3, 2016
3	FEIS SITEPLAN	MAY 18, 2017

CAD File:	160042-SITEPLAN
Layout:	SP 100 2_3
Drawn By: MK	Checked By: JOR
Scale: 1" = 100'	Project No.: 16-0042
Tax Map No.:	SEE SHEET 2
Date:	JULY 21, 2016
Sheet/Drawing No.:	C 7 OF 40

MATCHLINE SHEET 1
MATCHLINE SHEET 2

MATCHLINE SHEET 2
MATCHLINE SHEET 3

"CR" ZONE LIMIT

APPROX. LIMITS OF FLOODPLAIN

EX. ARCADIA HILLS WELL #52

PROPOSED PARCEL TO BE OFFERED TO TOWN OF GOSHEN FOR ARCADIA HILLS WATER DISTRICT WELL

UTILIZE EXISTING GRAVEL ACCESS DRIVE FOR EMERGENCY ACCESS -STABILIZE AS NECESSARY

TERMINATE DRY-BARREL WATERMAIN CONNECTION MIN. 20' FROM EXISTING ARCADIA HILLS WATERMAIN FOR FUTURE CONNECTION BY TOWN OF GOSHEN INSTALL HYDRANT, VALVE, & CAP

APPROX. LIMITS OF FLOODPLAIN

GATED EMERGENCY ACCESS

APPROX. LIMITS OF FLOODPLAIN

NYS DEC WETLAND

100' ADJACENT AREA

EX. ARCADIA HILLS WELL #51A

EX. ARCADIA HILLS WELL PUMP HOUSE

PROPOSED PARCEL TO BE OFFERED TO TOWN OF GOSHEN FOR ARCADIA HILLS WATER DISTRICT WELLS & PUMP HOUSE

EX. WELL #3 TO BE ABANDONED

EX. ARCADIA HILLS WELL #51

PROPOSED PERMANENT FEDERAL WETLAND DISTURBANCE=0.016± AC.

GATED EMERGENCY ACCESS

"CR" ZONE LIMIT

CLEAR & RE-GRADE EMERGENCY ACCESS

EX. ARCADIA HILLS WELL

PROPOSED PARCEL TO BE RETAINED BY TOWN OF GOSHEN FOR ARCADIA HILLS WATER DISTRICT WELL AND PUMP HOUSE

GATED EMERGENCY ACCESS

GATED EMERGENCY ACCESS TO ARCADIA ROAD

"CR" ZONE LIMIT

ARCADIA ROAD

GRID

COPYRIGHT 2016, LANC & TULLY, P.C.

LEGEND

	PROPERTY LINE
	ADJOINING PARCEL LINES
590	EXISTING MAJOR CONTOUR
	EXISTING MINOR CONTOUR
	EXISTING EASEMENT
	EXISTING WATERCOURSE
	EXISTING FEDERAL WETLAND BOUNDARY
	EXISTING NYS WETLAND BOUNDARY
	STREAM CORRIDOR AND RESERVOIR WATERSHED OVERLAY ZONING DISTRICT LIMIT
	FLOODPLAIN AND PONDING AREA OVERLAY
590	PROPOSED MAJOR CONTOUR
588	PROPOSED MINOR CONTOUR
	PROPOSED EDGE OF PAVEMENT
	PROPOSED RETAINING WALL
	PROPOSED DRAINAGE
	PROPOSED SWALE
	PROPOSED SANITARY SEWER
	PROPOSED WATER MAIN
	PROPOSED HYDRANT/VALVE
	PROPOSED DRAINAGE MANHOLE
	PROPOSED FLAT INLET CATCH BASINS
	PROPOSED CURB INLET CATCH BASIN

GRAPHIC SCALE

100 0 50 100 200 400

(IN FEET)
1 inch = 100 ft.

COPIES FROM THE ORIGINAL OF THIS DOCUMENT NOT MARKED WITH AN ORIGINAL OF THE PROFESSIONAL ENGINEER'S AND/OR LAND SURVEYOR'S STAMP OR EMBOSSED SEAL SHALL NOT BE CONSIDERED VALID, TRUE COPIES.

UNAUTHORIZED ALTERATION OR ADDITION TO THIS DOCUMENT IS A VIOLATION OF SECTION 7209-2 OF THE NEW YORK STATE EDUCATION LAW.

LANC & TULLY
ENGINEERING AND SURVEYING, P.C.
P.O. Box 687, Rt. 207
Goshen, N.Y. 10924
(845) 294-3700

MERLIN ENTERTAINMENTS

FORREC

MASER CONSULTING P.A.

SITE PLAN – 100 SCALE
SHEET 3 OF 3

LEGOLAND NEW YORK
TOWN OF GOSHEN
ORANGE COUNTY, NEW YORK

Revisions:

No.	Description	Issue Date
1	PLAN DEVELOPMENT	SEPTEMBER 1, 2016
2	PLAN DEVELOPMENT	NOVEMBER 3, 2016
3	FEIS SITEPLAN	MAY 18, 2017

CAD File: 160042-SITEPLAN	
Layout: SP 100 3_3	
Drawn By: MK	Checked By: JOR
Scale: 1" = 100'	Project No.: 16-0042
Tax Map No.: SEE SHEET 2	
Date: JULY 21, 2016	
Sheet/Drawing No.: C 8 OF 40	

LEGEND

- PROPERTY LINE
- ADJOINING PARCEL LINES
- 590 — EXISTING MAJOR CONTOUR
- EXISTING MINOR CONTOUR
- EXISTING EASEMENT
- EXISTING WATERCOURSE
- EXISTING FEDERAL WETLAND BOUNDARY
- EXISTING NYS WETLAND BOUNDARY
- STREAM CORRIDOR AND RESERVOIR WATERSHED OVERLAY ZONING DISTRICT LIMIT
- FLOODPLAIN AND PONDING AREA OVERLAY
- 590 — PROPOSED MAJOR CONTOUR
- 588 — PROPOSED MINOR CONTOUR
- PROPOSED EDGE OF PAVEMENT
- PROPOSED RETAINING WALL
- PROPOSED DRAINAGE
- PROPOSED SWALE
- PROPOSED SANITARY SEWER
- PROPOSED WATER MAIN
- PROPOSED HYDRANT/VALVE
- PROPOSED DRAINAGE MANHOLE
- PROPOSED FLAT INLET CATCH BASINS
- PROPOSED CURB INLET CATCH BASIN

GRAPHIC SCALE

200 0 100 200 400 800

(IN FEET)
1 inch = 200 ft.

COPIES FROM THE ORIGINAL OF THIS DOCUMENT NOT MARKED WITH AN ORIGINAL OF THE PROFESSIONAL ENGINEER'S AND/OR LAND SURVEYOR'S STAMP OR EMBOSSED SEAL SHALL NOT BE CONSIDERED VALID, TRUE COPIES.

UNAUTHORIZED ALTERATION OR ADDITION TO THIS DOCUMENT IS A VIOLATION OF SECTION 7209-2 OF THE NEW YORK STATE EDUCATION LAW.

COPYRIGHT 2016, LANC & TULLY, P.C.

LANC & TULLY
ENGINEERING AND SURVEYING, P.C.
P.O. Box 667, Rt. 207
Goshen, N.Y. 10924
(845) 294-3700

MERLIN ENTERTAINMENTS

FORREC

MASER CONSULTING P.A.

OVERALL WATER AND SEWER SYSTEMS MAP

LEGOLAND NEW YORK

TOWN OF GOSHEN
ORANGE COUNTY, NEW YORK

Revisions:

No.	Description	Issue Date
1	PLAN DEVELOPMENT	SEPTEMBER 1, 2016
2	PLAN DEVELOPMENT	NOVEMBER 3, 2016
3	FEIS SITEPLAN	MAY 18, 2017

CAD File: 160042-G_U Plan	
Layout: WTR SWR MAP	
Drawn By: MK	Checked By: JOR
Scale: 1" = 200'	Project No.: 16-0042
Tax Map No.: SEE SHEET 2	
Date: JULY 21, 2016	
Sheet/Drawing No.: C 9 OF 40	

NEW YORK STATE ROUTE 17
(EAST BOUND)

REFER TO TRAFFIC IMPROVEMENT PLANS PREPARED BY MASER CONSULTING FOR EXIT 125 RELOCATION & HARRIMAN DRIVE WIDENING

(2) SANITARY SEWER FORCE MAINS: ARCADIA HILLS REPLACEMENT & NEW LEGOLAND

SOUTH STREET

HARRIMAN DRIVE

PROPOSED MONUMENT SIGNS FINAL LOCATION T.B.D.

CMP CULVERT (HEAVILY SILTED)

PROPOSED CULVERT

50' SETBACK

WATER MAIN EXTENSION TO VILLAGE OF GOSHEN WATER SYSTEM

PROPOSED MONUMENT SIGNS FINAL LOCATION T.B.D.

TRAFFIC IMPROVEMENTS
RETAINING WALL
276 L.F.
MAX HEIGHT=12.5'

DAY GUEST MAIN ENTRANCE ROAD

N/F
LIFESTYLE CONCEPTS LLC
L. 12200 P. 1414
128 - 1 - 2.2
FM LOT
MAP NO. 200-94

FEDERAL WETLAND
(NYSDEC ELIGIBLE)

RETAINING WALL
592' L.F.
MAX HEIGHT=20'

EX. WELL TO BE ABANDONED

START GUIDERAIL

GOLF DRIVE

MATCHLINE SHEET 1

MATCHLINE SHEET 3

N/F
LIFESTYLE CONCEPTS LLC
L. 12200 P. 1414
128 - 1 - 2.2
FM LOT
MAP NO. 58-00

RETAINING WALL
248 L.F.
MAX HEIGHT=10'

RIDE QUEUE

PLAYSCAPE

RETAINING WALL
144 L.F.
MAX HEIGHT=8'

RIDE

RIDE QUEUE

RETAIL

DARK RIDE

FOOD KIOSK

PLAY

END GUIDERAIL

START GUIDERAIL

PROPOSED PERMANENT FEDERAL WETLAND DISTURBANCE=0.039± AC.

MATCHLINE SHEET 1

MATCHLINE SHEET 2

GRAPHIC SCALE

50 0 25 50 100 200

(IN FEET)
1 inch = 50 ft.

LEGEND

	PROPERTY LINE
	ADJOINING PARCEL LINES
590	EXISTING MAJOR CONTOUR
	EXISTING MINOR CONTOUR
	EXISTING EASEMENT
	EXISTING WATERCOURSE
	EXISTING FEDERAL WETLAND BOUNDARY
	EXISTING NYS WETLAND BOUNDARY
	STREAM CORRIDOR AND RESERVOIR WATERSHED OVERLAY ZONING DISTRICT LIMIT
	FLOODPLAIN AND PONDING AREA OVERLAY
590	PROPOSED MAJOR CONTOUR
588	PROPOSED MINOR CONTOUR
	PROPOSED EDGE OF PAVEMENT
	PROPOSED RETAINING WALL
	PROPOSED DRAINAGE
	PROPOSED SWALE
	PROPOSED SANITARY SEWER
	PROPOSED WATER MAIN
	PROPOSED HYDRANT/VALVE
	PROPOSED DRAINAGE MANHOLE
	PROPOSED FLAT INLET CATCH BASINS
	PROPOSED CURB INLET CATCH BASIN

COPYRIGHT 2016, LANC & TULLY, P.C.

LANC & TULLY
ENGINEERING AND SURVEYING, P.C.
P.O. Box 687, Rt. 207
Goshen, N.Y. 10924
(845) 294-3700

MERLIN ENTERPRISES

FORREC

MASER CONSULTING P.C.

GRADING & UTILITY PLAN
SHEET 1 OF 7

LEGOLAND NEW YORK

TOWN OF GOSHEN
ORANGE COUNTY, NEW YORK

Revisions:

No.	Description	Issue Date
1	PLAN DEVELOPMENT	SEPTEMBER 1, 2016
2	PLAN DEVELOPMENT	NOVEMBER 3, 2016
3	FEIS SITEPLAN	MAY 18, 2017

CAD File: 160042-G_U Plan	
Layout: G_U 1	
Drawn By: MK	Checked By: JOR
Scale: 1" = 50'	Project No.: 16-0042
Tax Map No.: SEE SHEET 2	
Date: JULY 21, 2016	
Sheet/Drawing No.: C 10 OF 40	

COPIES FROM THE ORIGINAL OF THIS DOCUMENT NOT MARKED WITH AN ORIGINAL OF THE PROFESSIONAL ENGINEER'S AND/OR LAND SURVEYOR'S STAMP OR EMBOSSED SEAL SHALL NOT BE CONSIDERED VALID, TRUE COPIES.

UNAUTHORIZED ALTERATION OR ADDITION TO THIS DOCUMENT IS A VIOLATION OF SECTION 7209-2 OF THE NEW YORK STATE EDUCATION LAW.

MATCHLINE SHEET 1
MATCHLINE SHEET 2

N/F
LIFESTYLE CONCEPTS LLC
L. 12200 P. 1414
128 – 1 – 2.2
FM 17 LOT
MAP NO. 58-00

50' SETBACK

EX. WELL TO BE ABANDONED

GOSHEN
GOSHEN

N/F
SCHWARTZ
L. 12717 P. 1986
11 – 1 – 43

N/F
SERDAREVIC
L. 2412 P. 61
15 – 1 – 58
FM 27 LOT
MAP NO. 8629

PROPOSED PERMANENT FEDERAL WETLAND DISTURBANCE=0.039± AC.

START GUIDERAIL

END GUIDERAIL

GUIDERAIL

RETAINING WALL 86' L.F. MAX HEIGHT=9.5'

RETAINING WALL 81' L.F. MAX HEIGHT=13'

PROPOSED PERMANENT FEDERAL WETLAND DISTURBANCE=0.030± AC.

RETAINING WALL 96' L.F. MAX HEIGHT=16'

RETAINING WALL 60' L.F. MAX HEIGHT=10.5'

PROPOSED PERMANENT FEDERAL WETLAND DISTURBANCE=0.040± AC.

SERVICE ROAD

RESTAURANT

RETAIL

RIDE QUEUE

PLAY

ATTRACTION

CLUSTER GATE

RIDE

WR

FOOD STAND

FOOD KIOSK

DARK RIDE

THEATRE

QUEUE

INTERACTIVE FOUNTAIN

HOTEL AMENITIES

LEGO MODEL SCENES

RETAINING WALL 132 L.F. MAX HEIGHT=6'

RETAINING WALL 62 L.F. MAX HEIGHT=6.5'

RETAINING WALL 62 L.F. MAX HEIGHT=4'

RETAINING WALL 115 L.F. MAX HEIGHT=5'

RETAINING WALL 41 L.F. MAX HEIGHT=4'

RETAINING WALL 152 L.F. MAX HEIGHT=4'

RETAINING WALL 104 L.F. MAX HEIGHT=7'

RETAINING WALL 100 L.F. MAX HEIGHT=10.5'

RETAINING WALL 131 L.F. MAX HEIGHT=10'

RETAINING WALL 93 L.F. MAX HEIGHT=5'

RETAINING WALL 76 L.F. MAX HEIGHT=4'

RETAINING WALL 75 L.F. MAX HEIGHT=

MATCHLINE SHEET 2
MATCHLINE SHEET 5

MATCHLINE SHEET 2
MATCHLINE SHEET 4

GRID

LEGEND

	PROPERTY LINE
	ADJOINING PARCEL LINES
590	EXISTING MAJOR CONTOUR
	EXISTING MINOR CONTOUR
	EXISTING EASEMENT
	EXISTING WATERCOURSE
	EXISTING FEDERAL WETLAND BOUNDARY
	EXISTING NYS WETLAND BOUNDARY
	STREAM CORRIDOR AND RESERVOIR WATERSHED OVERLAY ZONING DISTRICT LIMIT
	FLOODPLAIN AND PONDING AREA OVERLAY
590	PROPOSED MAJOR CONTOUR
588	PROPOSED MINOR CONTOUR
	PROPOSED EDGE OF PAVEMENT
	PROPOSED RETAINING WALL
	PROPOSED DRAINAGE
	PROPOSED SWALE
	PROPOSED SANITARY SEWER
	PROPOSED WATER MAIN
	PROPOSED HYDRANT/VALVE
	PROPOSED DRAINAGE MANHOLE
	PROPOSED FLAT INLET CATCH BASINS
	PROPOSED CURB INLET CATCH BASIN

GRAPHIC SCALE

50 0 25 50 100 200

(IN FEET)
1 inch = 50 ft.

COPYRIGHT 2016, LANC & TULLY, P.C.

LANC & TULLY
ENGINEERING AND SURVEYING, P.C.
P.O. Box 667, Rt. 207
Goshen, N.Y. 10924
(845) 294-3700

MERLIN ENTERTAINMENTS

FORREC

MASER CONSULTING P.A.

GRADING & UTILITY PLAN
SHEET 2 OF 7

LEGOLAND NEW YORK

TOWN OF GOSHEN
ORANGE COUNTY, NEW YORK

Revisions:

No.	Description	Issue Date
1	PLAN DEVELOPMENT	SEPTEMBER 1, 2016
2	PLAN DEVELOPMENT	NOVEMBER 3, 2016
3	FEIS SITEPLAN	MAY 18, 2017

CAD File: 160042-G_U Plan	
Layout: G_U 2	
Drawn By: MK	Checked By: JOR
Scale: 1" = 50'	Project No.: 16-0042
Tax Map No.: SEE SHEET 2	
Date: JULY 21, 2016	
Sheet/Drawing No.: C 11 OF 40	

COPIES FROM THE ORIGINAL OF THIS DOCUMENT NOT MARKED WITH AN ORIGINAL OF THE PROFESSIONAL ENGINEER'S AND/OR LAND SURVEYOR'S STAMP OR EMBOSSED SEAL SHALL NOT BE CONSIDERED VALID, TRUE COPIES.

UNAUTHORIZED ALTERATION OR ADDITION TO THIS DOCUMENT IS A VIOLATION OF SECTION 7209-2 OF THE NEW YORK STATE EDUCATION LAW.

MATCHLINE SHEET 1
MATCHLINE SHEET 3
MATCHLINE SHEET 7
MATCHLINE SHEET 4
MATCHLINE SHEET 3
MATCHLINE SHEET 4

RETAINING WALL 215 L.F. MAX HEIGHT=19'
18 STANDARD + 1 ACCESSIBLE SPOTS =19 TOTAL PARKING
738 STANDARD + 16 ACCESSIBLE SPOTS =754 TOTAL PARKING
ADMINISTRATION BUILDING
PROPOSED DRY-BARREL WATERMAIN CONNECTION (VALVE NORMALLY CLOSED) 8" DIOD POLYETHYLENE PC 150
PROPOSED WATER BOOSTER STATION
MAINTENANCE/ WAREHOUSE BUILDING
LANDSCAPE BUILDING
TRASH FACILITY
EX. WELL TO BE ABANDONED
RETAINING WALL 89 L.F. MAX HEIGHT=10.5'
RETAINING WALL 244 L.F. MAX HEIGHT=14'
END GUIDERAIL
BREAK GUIDERAIL
MAINTENANCE ACCESS
START GUIDERAIL
SERVICE ROAD
RIDE QUEUE
PLAYSCAPE
RETAINING WALL 144 L.F. MAX HEIGHT=8'
RIDE
RESTAURANT
FIRST AID
WR
FOOD KIOSK
ATTRACTION
RETAIL
THEATRE
RETAINING WALL 76 L.F. MAX HEIGHT=4'
PLAY
DARK RIDE
RETAINING WALL 75 L.F. MAX HEIGHT=4.5'
RETAINING WALL 157 L.F. MAX HEIGHT=15'
CLUSTER GATE
RETAINING WALL 50 L.F. MAX HEIGHT=6'
RETAINING WALL 130 L.F. MAX HEIGHT=4'
LEGO MODEL SCENES
RETAINING WALL 100 L.F. MAX HEIGHT=10.5'
RETAINING WALL 314 L.F. MAX HEIGHT=17.5'
RETAINING WALL 300 L.F. MAX HEIGHT=17.5'
FOOD STAND
PROPOSED DRY-BARREL WATERMAIN CONNECTION (VALVE NORMALLY CLOSED) 8" DIOD POLYETHYLENE PC 150

GRID

LEGEND

- PROPERTY LINE
- ADJOINING PARCEL LINES
- 590 — EXISTING MAJOR CONTOUR
- EXISTING MINOR CONTOUR
- EXISTING EASEMENT
- EXISTING WATERCOURSE
- EXISTING FEDERAL WETLAND BOUNDARY
- EXISTING NYS WETLAND BOUNDARY
- STREAM CORRIDOR AND RESERVOIR WATERSHED OVERLAY ZONING DISTRICT LIMIT
- FLOODPLAIN AND PONDING AREA OVERLAY
- 590 — PROPOSED MAJOR CONTOUR
- 588 — PROPOSED MINOR CONTOUR
- PROPOSED EDGE OF PAVEMENT
- PROPOSED RETAINING WALL
- PROPOSED DRAINAGE
- PROPOSED SWALE
- PROPOSED SANITARY SEWER
- PROPOSED WATER MAIN
- PROPOSED HYDRANT/VALVE
- PROPOSED DRAINAGE MANHOLE
- PROPOSED FLAT INLET CATCH BASINS
- PROPOSED CURB INLET CATCH BASIN

GRAPHIC SCALE
50 0 25 50 100 200
(IN FEET)
1 inch = 50 ft.

COPYRIGHT 2016, LANC & TULLY, P.C.

LANC & TULLY
ENGINEERING AND SURVEYING, P.C.
P.O. Box 687, Rt. 207
Goshen, N.Y. 10924
(845) 294-3700

MERLIN ENTERTAINMENTS
FORREC
MASER CONSULTING P.A.

GRADING & UTILITY PLAN
SHEET 3 OF 7

LEGOLAND NEW YORK
TOWN OF GOSHEN
ORANGE COUNTY, NEW YORK

Revisions:

No.	Description	Issue Date
1	PLAN DEVELOPMENT	SEPTEMBER 1, 2016
2	PLAN DEVELOPMENT	NOVEMBER 3, 2016
3	FEIS SITEPLAN	MAY 18, 2017

CAD File: 160042-G_U Plan	
Layout: G_U 3	
Drawn By: MK	Checked By: JOR
Scale: 1" = 50'	Project No.: 16-0042
Tax Map No.: SEE SHEET 2	
Date: JULY 21, 2016	
Sheet/Drawing No.: C 12 OF 40	

COPIES FROM THE ORIGINAL OF THIS DOCUMENT NOT MARKED WITH AN ORIGINAL OF THE PROFESSIONAL ENGINEER'S AND/OR LAND SURVEYOR'S STAMP OR EMBOSSED SEAL SHALL NOT BE CONSIDERED VALID, TRUE COPIES.

UNAUTHORIZED ALTERATION OR ADDITION TO THIS DOCUMENT IS A VIOLATION OF SECTION 7209-2 OF THE NEW YORK STATE EDUCATION LAW.

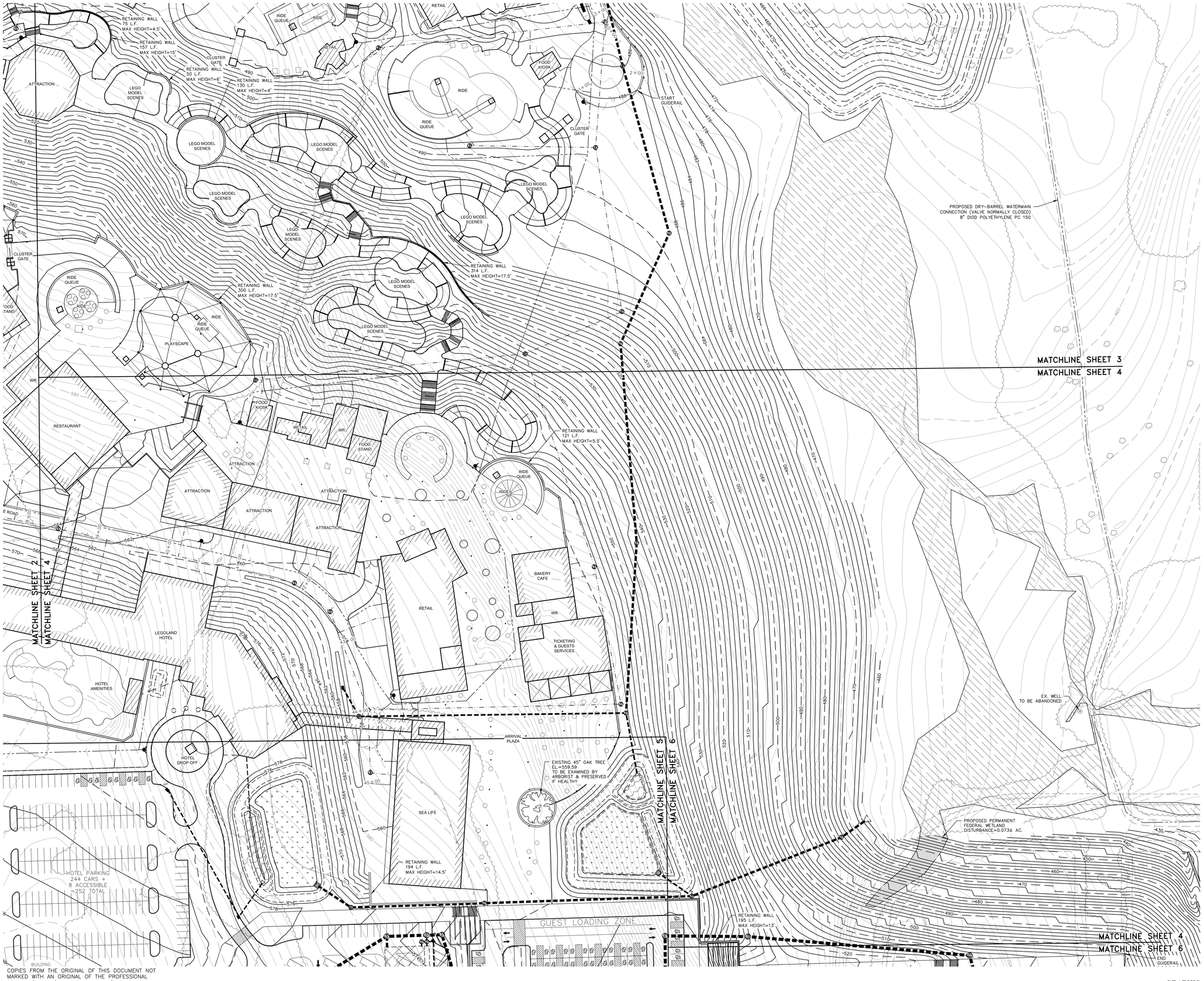

LEGEND

- PROPERTY LINE
- ADJOINING PARCEL LINES
- 590 — EXISTING MAJOR CONTOUR
- EXISTING MINOR CONTOUR
- EXISTING EASEMENT
- EXISTING WATERCOURSE
- EXISTING FEDERAL WETLAND BOUNDARY
- EXISTING NYS WETLAND BOUNDARY
- STREAM CORRIDOR AND RESERVOIR WATERSHED OVERLAY ZONING DISTRICT LIMIT
- FLOODPLAIN AND PONDING AREA OVERLAY
- 590 — PROPOSED MAJOR CONTOUR
- 588 — PROPOSED MINOR CONTOUR
- PROPOSED EDGE OF PAVEMENT
- PROPOSED RETAINING WALL
- PROPOSED DRAINAGE
- PROPOSED SWALE
- PROPOSED SANITARY SEWER
- PROPOSED WATER MAIN
- PROPOSED HYDRANT/VALVE
- PROPOSED DRAINAGE MANHOLE
- PROPOSED FLAT INLET CATCH BASINS
- PROPOSED CURB INLET CATCH BASIN

GRAPHIC SCALE

50 0 25 50 100 200

(IN FEET)
1 inch = 50 ft.

COPYRIGHT 2016, LANC & TULLY, P.C.

LANC & TULLY
ENGINEERING AND SURVEYING, P.C.
P.O. Box 687, Rt. 207
Goshen, N.Y. 10924
(845) 294-3700

MERLIN ENTERPRISES

FORREC

MASER CONSULTING P.A.

GRADING & UTILITY PLAN
SHEET 4 OF 7

LEGOLAND NEW YORK

TOWN OF GOSHEN
ORANGE COUNTY, NEW YORK

Revisions:

No.	Description	Issue Date
1	PLAN DEVELOPMENT	SEPTEMBER 1, 2016
2	PLAN DEVELOPMENT	NOVEMBER 3, 2016
3	FEIS SITEPLAN	MAY 18, 2017

CAD File:	160042-G_U Plan
Layout:	G_U 4
Drawn By: MK	Checked By: JOR
Scale: 1" = 50'	Project No.: 16-0042
Tax Map No.:	SEE SHEET 2
Date:	JULY 21, 2016
Sheet/Drawing No.:	C 13 OF 40

COPIES FROM THE ORIGINAL OF THIS DOCUMENT NOT MARKED WITH AN ORIGINAL OF THE PROFESSIONAL ENGINEER'S AND/OR LAND SURVEYOR'S STAMP OR EMBOSSED SEAL SHALL NOT BE CONSIDERED VALID, TRUE COPIES.

UNAUTHORIZED ALTERATION OR ADDITION TO THIS DOCUMENT IS A VIOLATION OF SECTION 7209-2 OF THE NEW YORK STATE EDUCATION LAW.

MATCHLINE SHEET 2
MATCHLINE SHEET 5

HOTEL DROP OFF
ARRIVAL PLAZA
EXISTING 45" OAK TREE EL.=559.59 TO BE EXAMINED BY ARBORIST & PRESERVED IF HEALTHY
SEA LIFE
RETAINING WALL 194 L.F. MAX HEIGHT=14.5'
HOTEL PARKING 244 CARS + 8 ACCESSIBLE =252 TOTAL
BUILDING RUINS
GUEST LOADING ZONE
52 ACCESSIBLE PARKING
BUS LOADING ZONE
RETAINING WALL 91 L.F. MAX HEIGHT=7'
RETAINING WALL 195 L.F. MAX HEIGHT=13'
RETAINING WALL 66 L.F. MAX HEIGHT=13'
RETAINING 786 L.F. MAX HEIGH
RETAINING WALL 774 L.F. MAX HEIGHT=11'
PARKING DECK ACCESS
PARKING 845 CARS
PARKING 598 CARS
PARKING 694 CARS
PARKING TOLL BOOTH
RETAINING WALL 654 L.F. @ MAX HEIGHT=18' 908 L.F. @ MAX HEIGHT=7'
END GUIDERAIL
START GUIDERAIL
RESORT ENTRANCE ROAD
RESORT EXIT ROAD
50' SETBACK
N/F SERDAREVIC L. 2412 P. 61 15 - 1 - 58 FM 7.7 LOT MAP NO. 8629
50'ø x 38 HIGH 558,000 GALLON WATER STORAGE TANK
8' CHAINLINK FENCE
MAINTENANCE ACCESS
EX. WELL TO BE ABANDONED
PROPOSED PARCEL TO BE SUBDIVIDED FOR EXISTING CELL TOWER
1 STORY BUILDING
CELLULAR TOWER
R.T.T. TOWER CELL CIRCLE
MOUNTABLE CURB
RETAINING WALL 664 L.F. MAX HEIGHT=14.5'
RETAINING WALL 245 L.F. MAX HEIGHT=5.5'
RETAINING WALL 405 L.F. MAX HEIGHT=13'
MATCHLINE SHEET 5
MATCHLINE SHEET 6

GRAPHIC SCALE
(IN FEET)
1 inch = 50 ft.

GRID

LEGEND

- PROPERTY LINE
- ADJOINING PARCEL LINES
- 590 EXISTING MAJOR CONTOUR
- EXISTING MINOR CONTOUR
- EXISTING EASEMENT
- EXISTING WATERCOURSE
- EXISTING FEDERAL WETLAND BOUNDARY
- EXISTING NYS WETLAND BOUNDARY
- STREAM CORRIDOR AND RESERVOIR WATERSHED OVERLAY ZONING DISTRICT LIMIT
- FLOODPLAIN AND PONDING AREA OVERLAY
- 590 PROPOSED MAJOR CONTOUR
- 588 PROPOSED MINOR CONTOUR
- PROPOSED EDGE OF PAVEMENT
- PROPOSED RETAINING WALL
- PROPOSED DRAINAGE
- PROPOSED SWALE
- PROPOSED SANITARY SEWER
- PROPOSED WATER MAIN
- PROPOSED HYDRANT/VALVE
- PROPOSED DRAINAGE MANHOLE
- PROPOSED FLAT INLET CATCH BASINS
- PROPOSED CURB INLET CATCH BASIN

COPYRIGHT 2016, LANC & TULLY, P.C.

LANC & TULLY
ENGINEERING AND SURVEYING, P.C.
P.O. Box 687, Rt. 207
Goshen, N.Y. 10924
(845) 294-3700

MERLIN ENTERTAINMENTS
FORREC
MASER CONSULTING P.A.

GRADING & UTILITY PLAN
SHEET 5 OF 7

LEGOLAND NEW YORK
TOWN OF GOSHEN
ORANGE COUNTY, NEW YORK

Revisions:

No.	Description	Issue Date
1	PLAN DEVELOPMENT	SEPTEMBER 1, 2016
2	PLAN DEVELOPMENT	NOVEMBER 3, 2016
3	FEIS SITEPLAN	MAY 18, 2017

CAD File: 160042-G_U Plan	
Layout: G_U 5	
Drawn By: MK	Checked By: JOR
Scale: 1" = 50'	Project No.: 16-0042
Tax Map No.: SEE SHEET 2	
Date: JULY 21, 2016	
Sheet/Drawing No.: C 14 OF 40	

COPIES FROM THE ORIGINAL OF THIS DOCUMENT NOT MARKED WITH AN ORIGINAL OF THE PROFESSIONAL ENGINEER'S AND/OR LAND SURVEYOR'S STAMP OR EMBOSSED SEAL SHALL NOT BE CONSIDERED VALID, TRUE COPIES.

UNAUTHORIZED ALTERATION OR ADDITION TO THIS DOCUMENT IS A VIOLATION OF SECTION 7209-2 OF THE NEW YORK STATE EDUCATION LAW.

LEGEND

	PROPERTY LINE
	ADJOINING PARCEL LINES
590	EXISTING MAJOR CONTOUR
	EXISTING MINOR CONTOUR
	EXISTING EASEMENT
	EXISTING WATERCOURSE
	EXISTING FEDERAL WETLAND BOUNDARY
	EXISTING NYS WETLAND BOUNDARY
	STREAM CORRIDOR AND RESERVOIR WATERSHED OVERLAY ZONING DISTRICT LIMIT
	FLOODPLAIN AND PONDING AREA OVERLAY
590	PROPOSED MAJOR CONTOUR
588	PROPOSED MINOR CONTOUR
	PROPOSED EDGE OF PAVEMENT
	PROPOSED RETAINING WALL
	PROPOSED DRAINAGE
	PROPOSED SWALE
	PROPOSED SANITARY SEWER
	PROPOSED WATER MAIN
	PROPOSED HYDRANT/VALVE
	PROPOSED DRAINAGE MANHOLE
	PROPOSED FLAT INLET CATCH BASINS
	PROPOSED CURB INLET CATCH BASIN

GRAPHIC SCALE

50 0 25 50 100 200

(IN FEET)
1 inch = 50 ft.

COPYRIGHT 2016, LANC & TULLY, P.C.

LANC & TULLY
ENGINEERING AND SURVEYING, P.C.
P.O. Box 687, Rt. 207
Goshen, N.Y. 10924
(845) 294-3700

MERLIN ENTERPRISES

FORREC

MASER CONSULTING P.A.

GRADING & UTILITY PLAN
SHEET 6 OF 7

LEGOLAND NEW YORK

TOWN OF GOSHEN
ORANGE COUNTY, NEW YORK

Revisions:

No.	Description	Issue Date
1	PLAN DEVELOPMENT	SEPTEMBER 1, 2016
2	PLAN DEVELOPMENT	NOVEMBER 3, 2016
3	FEIS SITEPLAN	MAY 18, 2017

CAD File: 160042-G_U Plan	
Layout: G_U 6	
Drawn By: MK	Checked By: JOR
Scale: 1" = 50'	Project No.: 16-0042
Tax Map No.: SEE SHEET 2	
Date: JULY 21, 2016	
Sheet/Drawing No.: C 15 OF 40	

COPIES FROM THE ORIGINAL OF THIS DOCUMENT NOT MARKED WITH AN ORIGINAL OF THE PROFESSIONAL ENGINEER'S AND/OR LAND SURVEYOR'S STAMP OR EMBOSSED SEAL SHALL NOT BE CONSIDERED VALID, TRUE COPIES.

UNAUTHORIZED ALTERATION OR ADDITION TO THIS DOCUMENT IS A VIOLATION OF SECTION 7209-2 OF THE NEW YORK STATE EDUCATION LAW.

NYS ROUTE 17

HARRIMAN DRIVE

REFER TO TRAFFIC IMPROVEMENT PLANS PREPARED BY MASER CONSULTING FOR EXIT 125 RELOCATION & HARRIMAN DRIVE WIDENING

PROPOSED ARCADIA HILLS FORCEMAIN REPLACEMENT

PROPOSED NEW LEGOLAND FORCEMAIN

LEGOLAND SANITARY SEWER PUMP STATION

PROPOSED MONUMENT SIGN FINAL LOCATION T.B.D.

EX. WELL TO BE ABANDONED

PROPOSED PERMANENT FEDERAL WETLAND DISTURBANCE=0.063± AC.

RETAINING WALL 178 L.F. MAX HEIGHT=13.5'

PROPOSED TEMPORARY FEDERAL WETLAND DISTURBANCE=0.026± AC.

PROPOSED PERMANENT FEDERAL WETLAND DISTURBANCE=0.179± AC.

RETAINING WALL 234 L.F. MAX HEIGHT=13.5'

RETAINING WALL 215 L.F. MAX HEIGHT=19'

RETAINING WALL 395 L.F. MAX HEIGHT=5.5'

RETAINING WALL 89 L.F. MAX HEIGHT=10.5'

RETAINING WALL 244 L.F. MAX HEIGHT=14'

18 STANDARD + 1 ACCESSIBLE SPOTS =19 TOTAL PARKING

738 STANDARD + 16 ACCESSIBLE SPOTS =754 TOTAL PARKING

ADMINISTRATION BUILDING

MAINTENANCE/ WAREHOUSE BUILDING

LANDSCAPE BUILDING

PROPOSED WATER BOOSTER STATION

PROPOSED DRY-BARREL WATERMAIN CONNECTION (VALVE NORMALLY CLOSED) 8" DIOD POLYETHYLENE PC 150

PROPOSED ARCADIA HILLS FORCEMAIN REPLACEMENT

END GUIDERAIL

BREAK GUIDERAIL

MAINTENANCE ACCESS

MATCHLINE SHEET 7

MATCHLINE SHEET 4

RESTAURANT

GRAPHIC SCALE

50 0 25 50 100 200

(IN FEET)
1 inch = 50 ft.

LEGEND

- PROPERTY LINE
- ADJOINING PARCEL LINES
- EXISTING MAJOR CONTOUR
- EXISTING MINOR CONTOUR
- EXISTING EASEMENT
- EXISTING WATERCOURSE
- EXISTING FEDERAL WETLAND BOUNDARY
- EXISTING NYS WETLAND BOUNDARY
- STREAM CORRIDOR AND RESERVOIR WATERSHED OVERLAY ZONING DISTRICT LIMIT
- FLOODPLAIN AND PONDING AREA OVERLAY
- PROPOSED MAJOR CONTOUR
- PROPOSED MINOR CONTOUR
- PROPOSED EDGE OF PAVEMENT
- PROPOSED RETAINING WALL
- PROPOSED DRAINAGE
- PROPOSED SWALE
- PROPOSED SANITARY SEWER
- PROPOSED WATER MAIN
- PROPOSED HYDRANT/VALVE
- PROPOSED DRAINAGE MANHOLE
- PROPOSED FLAT INLET CATCH BASINS
- PROPOSED CURB INLET CATCH BASIN

COPYRIGHT 2016, LANC & TULLY, P.C.

LANC & TULLY
ENGINEERING AND SURVEYING, P.C.
P.O. Box 687, Rt. 207
Goshen, N.Y. 10924
(845) 294-3700

MERLIN ENTERTAINMENTS

FORREC

MASER CONSULTING P.A.

GRADING & UTILITY PLAN SHEET 7 OF 7

LEGOLAND NEW YORK

TOWN OF GOSHEN
ORANGE COUNTY, NEW YORK

Revisions:

No.	Description	Issue Date
1	PLAN DEVELOPMENT	SEPTEMBER 1, 2016
2	PLAN DEVELOPMENT	NOVEMBER 3, 2016
3	FEIS SITEPLAN	MAY 18, 2017

CAD File: 160042-G_U Plan	
Layout: G_U 7	
Drawn By: MK	Checked By: JOR
Scale: 1" = 50'	Project No.: 16-0042
Tax Map No.: SEE SHEET 2	
Date: JULY 21, 2016	
Sheet/Drawing No.: C 16 OF 40	

COPIES FROM THE ORIGINAL OF THIS DOCUMENT NOT MARKED WITH AN ORIGINAL OF THE PROFESSIONAL ENGINEER'S AND/OR LAND SURVEYOR'S STAMP OR EMBOSSED SEAL SHALL NOT BE CONSIDERED VALID, TRUE COPIES.

UNAUTHORIZED ALTERATION OR ADDITION TO THIS DOCUMENT IS A VIOLATION OF SECTION 7209-2 OF THE NEW YORK STATE EDUCATION LAW.

WEST BOUND TO GOSHEN

REFER TO TRAFFIC IMPROVEMENT PLANS PREPARED BY MASER CONSULTING FOR EXIT 125 RELOCATION & HARRIMAN DRIVE WIDENING

NYS ROUTE 17

REFER TO TRAFFIC IMPROVEMENT PLANS PREPARED BY MASER CONSULTING FOR EXIT 125 RELOCATION & HARRIMAN DRIVE WIDENING

EAST BOUND TO CHESTER

SOUTH STREET

(2) SANITARY SEWER FORCE MAINS: ARCADIA HILLS REPLACEMENT & NEW LEGOLAND

HARRIMAN DRIVE

PRESUMED LOCATION EXISTING SANITARY SEWER FORCEMAIN FROM ARCADIA HILLS EXACT LOCATION TO BE FIELD DETERMINED

PROPOSED R.O.W.

LEGOLAND SANITARY SEWER PUMP STATION

BIO-RETENTION AREA B2
AREA=2,300 SF
BED=447.00
BERM=449.00

DAT PRE-TREATMENT ENTR FOREBAY

PROPOSED PERMANENT FEDERAL WETLAND DISTURBANCE=0.063± AC.

CULVERT 4
OPEN BOTTOM CONCRETE BOX
INV IN=427.30
INV OUT=426.80
LENGTH=55'
WIDTH=60"
HEIGHT=48"

FEDERAL WETLAND (NYSDEC ELIGIBLE)

PROPOSED TEMPORARY FEDERAL WETLAND DISTURBANCE=0.026± AC.

PROPOSED PERMANENT FEDERAL WETLAND DISTURBANCE=0.179± AC.

PRE-TREATMENT FOREBAY

BIO-RETENTION AREA A2
AREA=15,200 SF
BED=426.00
BERM=429.00

PROPOSED ARCADIA HILLS FORCEMAIN REPLACEMENT

PORTION OF PARKING AREA TO BE LAND BANKED

DIVERSION STRUCTURE A2

100' ADJACENT AREA

BIO-RETENTION AREA B3
AREA=2,850 SF
BED=457.00
BERM=459.00

PRE-TREATMENT FOREBAY

DIVERSION STRUCTURE B10

UNDERGROUND SAND FILTER B10
CULTEC 902HD
8 ROWS X 39 CHAMBERS
CHAMBER INV=463.25
UNDERGROUND SAND FILTER ROWS L=143 FT X 2 ROWS

738 STANDARD
+ 16 ACCESSIBLE SPOTS
=754 TOTAL PARKING

APPROX. LIMITS OF FLOODPLAIN

PRE-TREATMENT FOREBAY

BIO-RETENTION AREA B4
AREA=2,060 SF
BED=487.50
BERM=490.00

BIO-RETENTION AREA B9
AREA=5,300 SF
BED=494.00
BERM=498.00

PROPOSED WATER BOOSTER STATION

CULVERT 3
OPEN BOTTOM CONCRETE BOX
INV IN=485.50
INV OUT=475.75
LENGTH=126'
WIDTH=48"
HEIGHT=36"

PRE-TREATMENT FOREBAY

DIVERSION STRUCTURE B9

DRY SWALES B8
LENGTH=540 LF
WIDTH=4'
DEPTH=1'

PRE-TREATMENT FOREBAY (DIVERSION FOREBAY)

PROPOSED PERMANENT FEDERAL WETLAND DISTURBANCE=0.039± AC.

DRY SWALE B9
LENGTH=230 LF
WIDTH=4'
DEPTH=1'

DRY SWALES B7
LENGTH=400 LF
WIDTH=4'
DEPTH=1'

BIO-RETENTION AREA B7
AREA=29,600 SF
BED=469.00
BERM=471.00

NYS DEC WETLAND GQ-41

100' ADJACENT AREA

STORMWATER POND B9
INVERT=458.00
PERM. POOL=462.00
BERM=471.00

POROUS PAVERS
TOTAL AREA=125,539 SF

FEDERAL WETLAND

PROPOSED DRY-BARREL WATERMAIN CONNECTION (VALVE NORMALLY CLOSED)
8" DIOD POLYETHYLENE PC 150

DRY SWALES B5
LENGTH=924 LF
WIDTH=3'
DEPTH=1'

POROUS PAVERS
TOTAL AREA=125,539 SF

MATCHLINE SHEET 1
MATCHLINE SHEET 2

MATCHLINE SHEET 1
MATCHLINE SHEET 2

CULVERT 2
OPEN BOTTOM CONCRETE BOX
INV IN=532.75
INV OUT=530.50
LENGTH=96'
WIDTH=36"
HEIGHT=36"

LEGEND

- PROPOSED DRY SWALE
- PROPOSED BIO-RETENTION AREA
- PROPOSED UNDERGROUND STORMWATER AREA
- PROPOSED STORMWATER POND
- PROPOSED POROUS PAVERS
- STORMWATER PRACTICE CONTRIBUTING AREA

LEGEND

- PROPERTY LINE
- ADJOINING PARCEL LINES
- EXISTING MAJOR CONTOUR
- EXISTING MINOR CONTOUR
- EXISTING EASEMENT
- EXISTING WATERCOURSE
- EXISTING FEDERAL WETLAND BOUNDARY
- EXISTING NYS WETLAND BOUNDARY
- STREAM CORRIDOR AND RESERVOIR WATERSHED OVERLAY ZONING DISTRICT LIMIT
- FLOODPLAIN AND PONDING AREA OVERLAY
- PROPOSED MAJOR CONTOUR
- PROPOSED MINOR CONTOUR
- PROPOSED EDGE OF PAVEMENT
- PROPOSED RETAINING WALL
- PROPOSED DRAINAGE
- PROPOSED SWALE
- PROPOSED SANITARY SEWER
- PROPOSED WATER MAIN
- PROPOSED HYDRANT/VALVE
- PROPOSED DRAINAGE MANHOLE
- PROPOSED FLAT INLET CATCH BASINS
- PROPOSED CURB INLET CATCH BASIN

GRAPHIC SCALE

100 0 50 100 200 400

(IN FEET)
1 inch = 100 ft.

COPIES FROM THE ORIGINAL OF THIS DOCUMENT NOT MARKED WITH AN ORIGINAL OF THE PROFESSIONAL ENGINEER'S AND/OR LAND SURVEYOR'S STAMP OR EMBOSSED SEAL SHALL NOT BE CONSIDERED VALID, TRUE COPIES.

UNAUTHORIZED ALTERATION OR ADDITION TO THIS DOCUMENT IS A VIOLATION OF SECTION 7209-2 OF THE NEW YORK STATE EDUCATION LAW.

COPYRIGHT 2016, LANC & TULLY, P.C.

LANC & TULLY
ENGINEERING AND SURVEYING, P.C.
P.O. Box 687, Rt. 207
Goshen, N.Y. 10924
(845) 294-3700

MERLIN ENTERTAINMENTS

FORREC

MASER CONSULTING P.A.

STORMWATER SYSTEM LAYOUT SHEET 1 OF 3

LEGOLAND NEW YORK

TOWN OF GOSHEN
ORANGE COUNTY, NEW YORK

Revisions:

No.	Description	Issue Date
1	PLAN DEVELOPMENT	SEPTEMBER 1, 2016
2	PLAN DEVELOPMENT	NOVEMBER 3, 2016
3	FEIS SITEPLAN	MAY 18, 2017

CAD File: 160042-Stormwater Layout	
Layout: SW 1	
Drawn By: ESR	Checked By: JOR
Scale: 1" = 100'	Project No.: 16-0042
Tax Map No.: SEE SHEET 2	
Date: JULY 21, 2016	
Sheet/Drawing No.: C 17 OF 40	

COPYRIGHT 2016, LANC & TULLY, P.C.

LEGEND

- PROPOSED DRY SWALE
- PROPOSED BIO-RETENTION AREA
- PROPOSED UNDERGROUND STORMWATER AREA
- PROPOSED STORMWATER POND
- PROPOSED POROUS PAVERS
- STORMWATER PRACTICE CONTRIBUTING AREA

LEGEND

- PROPERTY LINE
- ADJOINING PARCEL LINES
- EXISTING MAJOR CONTOUR (590)
- EXISTING MINOR CONTOUR
- EXISTING EASEMENT
- EXISTING WATERCOURSE
- EXISTING FEDERAL WETLAND BOUNDARY
- EXISTING NYS WETLAND BOUNDARY
- STREAM CORRIDOR AND RESERVOIR WATERSHED OVERLAY ZONING DISTRICT LIMIT
- FLOODPLAIN AND PONDING AREA OVERLAY
- PROPOSED MAJOR CONTOUR (590)
- PROPOSED MINOR CONTOUR (588)
- PROPOSED EDGE OF PAVEMENT
- PROPOSED RETAINING WALL
- PROPOSED DRAINAGE
- PROPOSED SWALE
- PROPOSED SANITARY SEWER
- PROPOSED WATER MAIN
- PROPOSED HYDRANT/VALVE
- PROPOSED DRAINAGE MANHOLE
- PROPOSED FLAT INLET CATCH BASINS
- PROPOSED CURB INLET CATCH BASIN

GRID

GRAPHIC SCALE

100 0 50 100 200 400

(IN FEET)
1 inch = 100 ft.

COPIES FROM THE ORIGINAL OF THIS DOCUMENT NOT MARKED WITH AN ORIGINAL OF THE PROFESSIONAL ENGINEER'S AND/OR LAND SURVEYOR'S STAMP OR EMBOSSED SEAL SHALL NOT BE CONSIDERED VALID, TRUE COPIES.

UNAUTHORIZED ALTERATION OR ADDITION TO THIS DOCUMENT IS A VIOLATION OF SECTION 7209-2 OF THE NEW YORK STATE EDUCATION LAW.

LANC & TULLY
ENGINEERING AND SURVEYING, P.C.
P.O. Box 687, Rt. 207
Goshen, N.Y. 10924
(845) 294-3700

MERLIN ENTERTAINMENTS

FORREC

MASER CONSULTING P.A.

STORMWATER SYSTEM LAYOUT
SHEET 2 OF 3

LEGOLAND NEW YORK

TOWN OF GOSHEN
ORANGE COUNTY, NEW YORK

Revisions:

No.	Description	Issue Date
1	PLAN DEVELOPMENT	SEPTEMBER 1, 2016
2	PLAN DEVELOPMENT	NOVEMBER 3, 2016
3	FEIS SITEPLAN	MAY 18, 2017

CAD File:	160042-Stormwater Layout
Layout:	SW 2
Drawn By: ESR	Checked By: JOR
Scale: 1" = 100'	Project No.: 16-0042
Tax Map No.:	SEE SHEET 2
Date:	JULY 21, 2016
Sheet/Drawing No.:	C 18 OF 40

PROPOSED DRY-BARREL WATERMAIN CONNECTION (VALVE NORMALLY CLOSED) 8" DIOD POLYETHYLENE PC 150

MATCHLINE SHEET 1
MATCHLINE SHEET 2

MATCHLINE SHEET 2
MATCHLINE SHEET 3

APPROX. LIMITS OF FLOODPLAIN

UTILIZE EXISTING GRAVEL ACCESS DRIVE FOR EMERGENCY ACCESS -STABILIZE AS NECESSARY

TERMINATE DRY-BARREL WATERMAIN CONNECTION MIN. 20' FROM EXISTING ARCADIA HILLS WATERMAIN FOR FUTURE CONNECTION BY TOWN OF GOSHEN INSTALL HYDRANT, VALVE, & CAP

APPROX. LIMITS OF FLOODPLAIN

DIVERSION STRUCTURE A3

UNDERGROUND SAND FILTER A3
CULTEC 902HD
8 ROWS X 90 CHAMBERS
CHAMBER INV=496.50

UNDERGROUND SAND FILTER ROW
L=330 FT

APPROX. LIMITS OF FLOODPLAIN

NYS DEC WETLAND

100' ADJACENT AREA

GATED EMERGENCY ACCESS

PROPOSED PERMANENT FEDERAL WETLAND DISTURBANCE=0.016± AC.

GATED EMERGENCY ACCESS

CLEAR & RE-GRADE EMERGENCY ACCESS

GATED EMERGENCY ACCESS TO ARCADIA ROAD

ARCADIA ROAD

GRID

MATCHLINE SHEET 2
MATCHLINE SHEET 3

LEGEND

- PROPOSED DRY SWALE
- PROPOSED BIO-RETENTION AREA
- PROPOSED UNDERGROUND STORMWATER AREA
- PROPOSED STORMWATER POND
- PROPOSED POROUS PAVERS
- STORMWATER PRACTICE CONTRIBUTING AREA

LEGEND

- PROPERTY LINE
- ADJOINING PARCEL LINES
- 590 — EXISTING MAJOR CONTOUR
- EXISTING MINOR CONTOUR
- EXISTING EASEMENT
- EXISTING WATERCOURSE
- EXISTING FEDERAL WETLAND BOUNDARY
- EXISTING NYS WETLAND BOUNDARY
- STREAM CORRIDOR AND RESERVOIR WATERSHED OVERLAY ZONING DISTRICT LIMIT
- FLOODPLAIN AND PONDING AREA OVERLAY
- 590 — PROPOSED MAJOR CONTOUR
- 588 — PROPOSED MINOR CONTOUR
- PROPOSED EDGE OF PAVEMENT
- PROPOSED RETAINING WALL
- PROPOSED DRAINAGE
- PROPOSED SWALE
- PROPOSED SANITARY SEWER
- PROPOSED WATER MAIN
- PROPOSED HYDRANT/VALVE
- PROPOSED DRAINAGE MANHOLE
- PROPOSED FLAT INLET CATCH BASINS
- PROPOSED CURB INLET CATCH BASIN

GRAPHIC SCALE

100 0 50 100 200 400

(IN FEET)
1 inch = 100 ft.

COPIES FROM THE ORIGINAL OF THIS DOCUMENT NOT MARKED WITH AN ORIGINAL OF THE PROFESSIONAL ENGINEER'S AND/OR LAND SURVEYOR'S STAMP OR EMBOSSED SEAL SHALL NOT BE CONSIDERED VALID, TRUE COPIES.

UNAUTHORIZED ALTERATION OR ADDITION TO THIS DOCUMENT IS A VIOLATION OF SECTION 7209-2 OF THE NEW YORK STATE EDUCATION LAW.

COPYRIGHT 2016, LANC & TULLY, P.C.

LANC & TULLY
ENGINEERING AND SURVEYING, P.C.
P.O. Box 687, Rt. 207
Goshen, N.Y. 10924
(845) 294-3700

MERLIN ENTERPRISES

FORREC

MASER CONSULTING P.A.

STORMWATER SYSTEM LAYOUT SHEET 3 OF 3

LEGOLAND NEW YORK

TOWN OF GOSHEN
ORANGE COUNTY, NEW YORK

Revisions:

No.	Description	Issue Date
1	PLAN DEVELOPMENT	SEPTEMBER 1, 2016
2	PLAN DEVELOPMENT	NOVEMBER 3, 2016
3	FEIS SITEPLAN	MAY 18, 2017

CAD File: 160042-STORMWATER LAYOUT	
Layout: SW 3	
Drawn By: ESR	Checked By: JOR
Scale: 1" = 100'	Project No.: 16-0042
Tax Map No.: SEE SHEET 2	
Date: JULY 21, 2016	
Sheet/Drawing No.: C 19 OF 40	

WEST BOUND TO GOSHEN

NYS ROUTE 17

EAST BOUND TO CHESTER

SOUTH STREET

HARRIMAN DRIVE

PROPOSED R.O.W.

STABILIZED CONSTRUCTION ENTRANCE

PERMANENT RIPRAP OUTLET L

TEMPORARY RIPRAP OUTLET SEDIMENT TRAP CONVERT TO BIO-RETENTION AREA AFTER CONTRIBUTING AREA HAS BEEN STABILIZED

PERMANENT RIPRAP OUTLET K

ORANGE CONSTRUCTION FENCE (TYP.)

PERMANENT RIPRAP OUTLET J

TEMPORARY RIPRAP OUTLET SEDIMENT TRAP CONVERT TO BIO-RETENTION AREA AFTER CONTRIBUTING AREA HAS BEEN STABILIZED

TEMPORARY SILT FENCE (TYP.)

EROSION CONTROL MATTING (TYP.)

TEMPORARY DIVERSION SWALE (TYP.)

PERMANENT RIPRAP OUTLET I

EROSION CONTROL MATTING (TYP.)

PERMANENT RIPRAP OUTLET H

PERMANENT RIPRAP OUTLET G

TEMPORARY RIPRAP OUTLET SEDIMENT TRAP CONVERT TO BIO-RETENTION AREA AFTER CONTRIBUTING AREA HAS BEEN STABILIZED

TEMPORARY RIPRAP OUTLET SEDIMENT TRAP CONVERT TO BIO-RETENTION AREA AFTER CONTRIBUTING AREA HAS BEEN STABILIZED

TEMPORARY DIVERSION SWALE (TYP.)

PROPOSED PERMANENT FEDERAL WETLAND DISTURBANCE=0.039± AC.

PERMANENT RIPRAP OUTLET F

PERMANENT RIPRAP OUTLET E

FEDERAL WETLAND (NYSDEC ELIGIBLE)

NYSDEC ADDITION TO WETLAND "E" 0.306± AC.

STABILIZED CONSTRUCTION ENTRANCE

PROPOSED PERMANENT FEDERAL WETLAND DISTURBANCE=0.063± AC.

PROPOSED TEMPORARY FEDERAL WETLAND DISTURBANCE=0.026± AC.

PROPOSED PERMANENT FEDERAL WETLAND DISTURBANCE=0.179± AC.

EROSION CONTROL MATTING (TYP.)

PERMANENT RIPRAP OUTLET M

PERMANENT LEVEL SPREADER

EROSION CONTROL MATTING (TYP.)

PERMANENT RIPRAP OUTLET N

DROP INLET PROTECTION (TYP.)

PERMANENT RIPRAP OUTLET A

TEMPORARY RIPRAP OUTLET SEDIMENT TRAP CONVERT TO BIO-RETENTION AREA AFTER CONTRIBUTING AREA HAS BEEN STABILIZED

ORANGE CONSTRUCTION FENCE (TYP.)

100' ADJACENT AREA

CURB INLET PROTECTION (TYP.)

EROSION CONTROL MATTING (TYP.)

LIMIT OF DISTURBANCE PARK AREA 149.9± ACRES

WETLAND "F" AREA: 51.052± AC.

NYS DEC WETLAND GO-41

TEMPORARY SEDIMENT BASIN

100' ADJACENT AREA

ORANGE CONSTRUCTION FENCE (TYP.)

FEDERAL WETLAND

TEMPORARY SILT FENCE (TYP.)

EROSION CONTROL MATTING (TYP.)

MATCHLINE SHEET 1
MATCHLINE SHEET 2

MATCHLINE SHEET
MATCHLINE SHEET

COPYRIGHT 2016, LANC & TULLY, P.C.

GRAPHIC SCALE

100 0 50 100 200 400

(IN FEET)
1 inch = 100 ft.

COPIES FROM THE ORIGINAL OF THIS DOCUMENT NOT MARKED WITH AN ORIGINAL OF THE PROFESSIONAL ENGINEER'S AND/OR LAND SURVEYOR'S STAMP OR EMBOSSED SEAL SHALL NOT BE CONSIDERED VALID, TRUE COPIES.

UNAUTHORIZED ALTERATION OR ADDITION TO THIS DOCUMENT IS A VIOLATION OF SECTION 7209-2 OF THE NEW YORK STATE EDUCATION LAW.

LEGEND

- PROPOSED LIMIT OF SOIL DISTURBANCE
- PROPOSED TEMPORARY SILTATION FENCE
- TEMPORARY SWALE
- PROPOSED TEMPORARY CATCH BASIN INLET PROTECTION
- PROPOSED TEMPORARY SEDIMENT TRAP
- PROPOSED CHECK DAM
- PROPOSED SLOPE STABILIZATION MATTING
- PROPOSED TEMPORARY LEVEL SPREADER
- TEMPORARY ORANGE CONSTRUCTION FENCE

LEGEND

- PROPERTY LINE
- ADJOINING PARCEL LINES
- 590 — EXISTING MAJOR CONTOUR
- EXISTING MINOR CONTOUR
- EXISTING EASEMENT
- EXISTING WATERCOURSE
- EXISTING FEDERAL WETLAND BOUNDARY
- EXISTING NYS WETLAND BOUNDARY
- STREAM CORRIDOR AND RESERVOIR WATERSHED OVERLAY ZONING DISTRICT LIMIT
- FLOODPLAIN AND PONDING AREA OVERLAY
- 590 — PROPOSED MAJOR CONTOUR
- 588 — PROPOSED MINOR CONTOUR
- PROPOSED EDGE OF PAVEMENT
- PROPOSED RETAINING WALL
- PROPOSED DRAINAGE
- PROPOSED SWALE
- PROPOSED SANITARY SEWER
- PROPOSED WATER MAIN
- PROPOSED HYDRANT/VALVE
- PROPOSED DRAINAGE MANHOLE
- PROPOSED FLAT INLET CATCH BASINS
- PROPOSED CURB INLET CATCH BASIN

GRID N

LANC & TULLY
ENGINEERING AND SURVEYING, P.C.
P.O. Box 687, Rt. 207
Goshen, N.Y. 10924
(845) 294-3700

MERLIN ENTERTAINMENTS

FORREC

MASER CONSULTING P.A.

EROSION AND SEDIMENT CONTROL PLAN SHEET 1 OF 3

LEGOLAND NEW YORK

TOWN OF GOSHEN
ORANGE COUNTY, NEW YORK

Revisions:

No.	Description	Issue Date
1	PLAN DEVELOPMENT	SEPTEMBER 1, 2016
2	PLAN DEVELOPMENT	NOVEMBER 3, 2016
3	FEIS SITEPLAN	MAY 18, 2017

CAD File: 160042-Erosion	
Layout: EROSION 1	
Drawn By: ESR	Checked By: JOR
Scale: 1" = 100'	Project No.: 16-0042
Tax Map No.: SEE SHEET 2	
Date: JULY 21, 2016	
Sheet/Drawing No.: C 20 OF 40	

MATCHLINE SHEET 1
MATCHLINE SHEET 2

PERMANENT RIPRAP OUTLET E

PROPOSED PERMANENT FEDERAL WETLAND DISTURBANCE=0.030± AC.

PERMANENT RIPRAP OUTLET D

TEMPORARY RIPRAP OUTLET SEDIMENT TRAP CONVERT TO BIO-RETENTION AREA AFTER CONTRIBUTING AREA HAS BEEN STABILIZED

PROPOSED PERMANENT FEDERAL WETLAND DISTURBANCE=0.040± AC.

LIMIT OF DISTURBANCE PARK AREA 149.9± ACRES

TEMPORARY SILT FENCE (TYP.)

EROSION CONTROL MATTING (TYP.)

POTENTIAL ROCK PROCESSING AREA

CURB INLET PROTECTION (TYP.)

SOIL STOCKPILE

FEDERAL WETLAND

TEMPORARY SILT FENCE (TYP.)

EROSION CONTROL MATTING (TYP.)

TEMPORARY RIPRAP OUTLET SEDIMENT TRAP CONVERT TO BIO-RETENTION AREA AFTER CONTRIBUTING AREA HAS BEEN STABILIZED

TEMPORARY RIPRAP OUTLET SEDIMENT TRAP

PERMANENT RIPRAP OUTLET B

PROPOSED PERMANENT FEDERAL WETLAND DISTURBANCE=0.073± AC.

EROSION CONTROL MATTING (TYP.)

UTILIZE EXISTING GRAVEL ACCESS DRIVE FOR EMERGENCY ACCESS -STABILIZE AS NECESSARY

ORANGE CONSTRUCTION FENCE (TYP.)

TEMPORARY RIPRAP OUTLET SEDIMENT TRAP

PERMANENT RIPRAP OUTLET C

TEMPORARY RIPRAP OUTLET SEDIMENT TRAP

WETLAND "N" AREA: 1.699± AC.

NYS DEC WETLAND

100' ADJACENT AREA

GATED EMERGENCY ACCESS

MATCHLINE SHEET 2
MATCHLINE SHEET 3

EROSION CONTROL MATTING (TYP.)

TEMPORARY RIPRAP OUTLET SEDIMENT TRAP

COPYRIGHT 2016, LANC & TULLY, P.C.

GRAPHIC SCALE

100 0 50 100 200 400

(IN FEET)
1 inch = 100 ft.

LEGEND

- PROPOSED LIMIT OF SOIL DISTURBANCE
- PROPOSED TEMPORARY SILTATION FENCE
- TEMPORARY SWALE
- PROPOSED TEMPORARY CATCH BASIN INLET PROTECTION
- PROPOSED TEMPORARY SEDIMENT TRAP
- PROPOSED CHECK DAM
- PROPOSED SLOPE STABILIZATION MATTING
- PROPOSED TEMPORARY LEVEL SPREADER
- TEMPORARY ORANGE CONSTRUCTION FENCE

LEGEND

- PROPERTY LINE
- ADJOINING PARCEL LINES
- 590 EXISTING MAJOR CONTOUR
- EXISTING MINOR CONTOUR
- EXISTING EASEMENT
- EXISTING WATERCOURSE
- EXISTING FEDERAL WETLAND BOUNDARY
- EXISTING NYS WETLAND BOUNDARY
- STREAM CORRIDOR AND RESERVOIR
- WATERSHED OVERLAY ZONING DISTRICT LIMIT
- FLOODPLAIN AND PONDING AREA OVERLAY
- 590 PROPOSED MAJOR CONTOUR
- 588 PROPOSED MINOR CONTOUR
- PROPOSED EDGE OF PAVEMENT
- PROPOSED RETAINING WALL
- PROPOSED DRAINAGE
- PROPOSED SWALE
- PROPOSED SANITARY SEWER
- PROPOSED WATER MAIN
- PROPOSED HYDRANT/VALVE
- PROPOSED DRAINAGE MANHOLE
- PROPOSED FLAT INLET CATCH BASINS
- PROPOSED CURB INLET CATCH BASIN

GRID

COPIES FROM THE ORIGINAL OF THIS DOCUMENT NOT MARKED WITH AN ORIGINAL OF THE PROFESSIONAL ENGINEER'S AND/OR LAND SURVEYOR'S STAMP OR EMBOSSED SEAL SHALL NOT BE CONSIDERED VALID, TRUE COPIES.

UNAUTHORIZED ALTERATION OR ADDITION TO THIS DOCUMENT IS A VIOLATION OF SECTION 7209-2 OF THE NEW YORK STATE EDUCATION LAW.

Dig Safely. New York. Call 811 before you dig

LANC & TULLY
ENGINEERING AND SURVEYING, P.C.
P.O. Box 687, Rt. 207
Goshen, N.Y. 10924
(845) 294-3700

MERLIN ENTERTAINMENTS

FORREC

MASER CONSULTING P.A.

EROSION AND SEDIMENT CONTROL PLAN SHEET 2 OF 3

LEGOLAND NEW YORK

TOWN OF GOSHEN
ORANGE COUNTY, NEW YORK

Revisions:

No.	Description	Issue Date
1	PLAN DEVELOPMENT	SEPTEMBER 1, 2016
2	PLAN DEVELOPMENT	NOVEMBER 3, 2016
3	FEIS SITEPLAN	MAY 18, 2017

CAD File:	160042-Erosion
Layout:	EROSION 2
Drawn By: ESR	Checked By: JOR
Scale: 1" = 100'	Project No.: 16-0042
Tax Map No.:	SEE SHEET 2
Date:	JULY 21, 2016
Sheet/Drawing No.:	C 21 OF 40

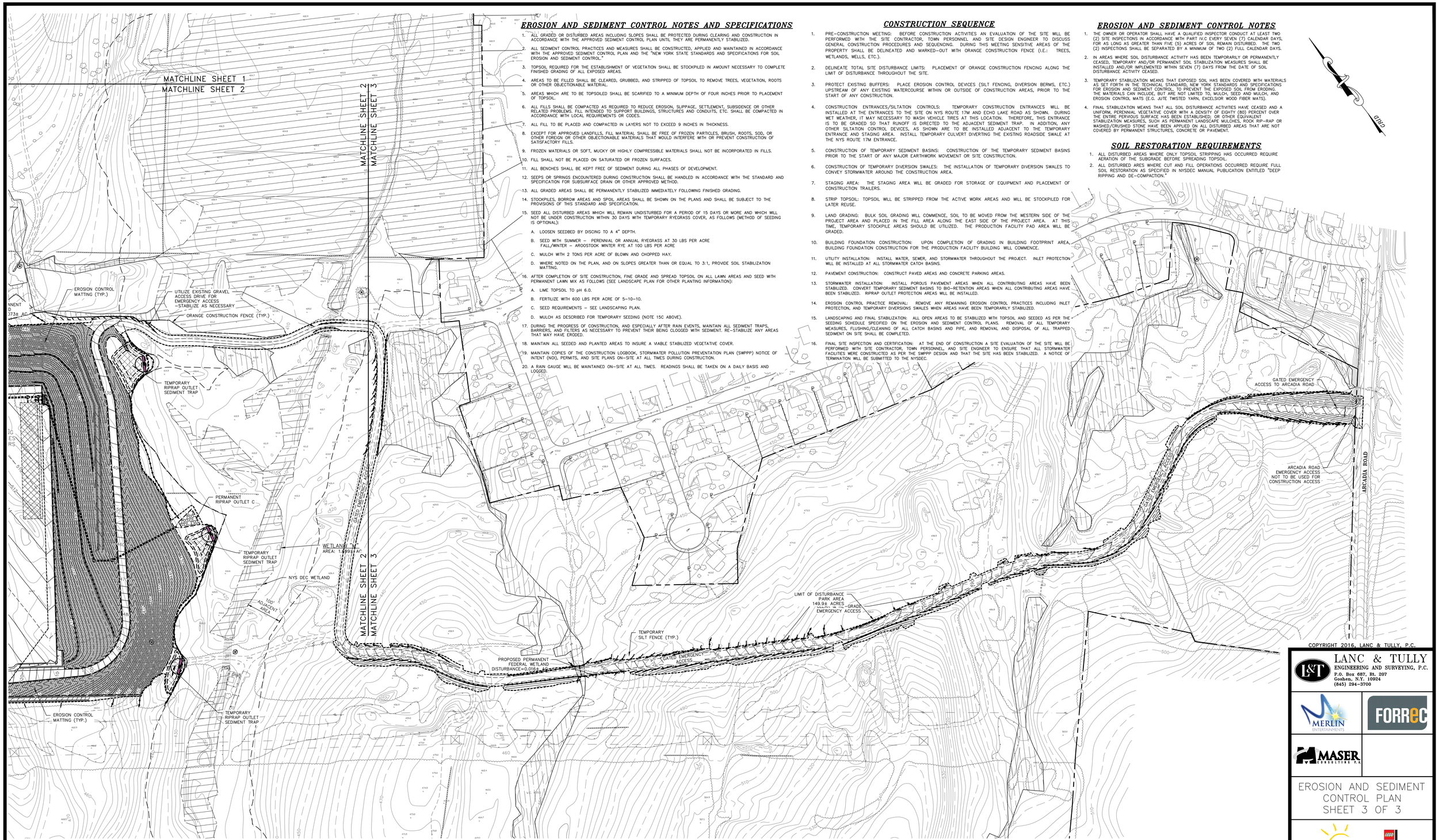

EROSION AND SEDIMENT CONTROL NOTES AND SPECIFICATIONS

1. ALL GRADED OR DISTURBED AREAS INCLUDING SLOPES SHALL BE PROTECTED DURING CLEARING AND CONSTRUCTION IN ACCORDANCE WITH THE APPROVED SEDIMENT CONTROL PLAN UNTIL THEY ARE PERMANENTLY STABILIZED.
2. ALL SEDIMENT CONTROL PRACTICES AND MEASURES SHALL BE CONSTRUCTED, APPLIED AND MAINTAINED IN ACCORDANCE WITH THE APPROVED SEDIMENT CONTROL PLAN AND THE "NEW YORK STATE STANDARDS AND SPECIFICATIONS FOR SOIL EROSION AND SEDIMENT CONTROL."
3. TOPSOIL REQUIRED FOR THE ESTABLISHMENT OF VEGETATION SHALL BE STOCKPILED IN AMOUNT NECESSARY TO COMPLETE FINISHED GRADING OF ALL EXPOSED AREAS.
4. AREAS TO BE FILLED SHALL BE CLEARED, GRUBBED, AND STRIPPED OF TOPSOIL TO REMOVE TREES, VEGETATION, ROOTS OR OTHER OBJECTIONABLE MATERIAL.
5. AREAS WHICH ARE TO BE TOPSOILED SHALL BE SCARIFIED TO A MINIMUM DEPTH OF FOUR INCHES PRIOR TO PLACEMENT OF TOPSOIL.
6. ALL FILLS SHALL BE COMPACTED AS REQUIRED TO REDUCE EROSION, SLIPPAGE, SETTLEMENT, SUBSIDENCE OR OTHER RELATED PROBLEMS. FILL INTENDED TO SUPPORT BUILDINGS, STRUCTURES AND CONDUITS, ETC. SHALL BE COMPACTED IN ACCORDANCE WITH LOCAL REQUIREMENTS OR CODES.
7. ALL FILL TO BE PLACED AND COMPACTED IN LAYERS NOT TO EXCEED 9 INCHES IN THICKNESS.
8. EXCEPT FOR APPROVED LANDFILLS, FILL MATERIAL SHALL BE FREE OF FROZEN PARTICLES, BRUSH, ROOTS, SOD, OR OTHER FOREIGN OR OTHER OBJECTIONABLE MATERIALS THAT WOULD INTERFERE WITH OR PREVENT CONSTRUCTION OF SATISFACTORY FILLS.
9. FROZEN MATERIALS OR SOFT, MUCKY OR HIGHLY COMPRESSIBLE MATERIALS SHALL NOT BE INCORPORATED IN FILLS.
10. FILL SHALL NOT BE PLACED ON SATURATED OR FROZEN SURFACES.
11. ALL BENCHES SHALL BE KEPT FREE OF SEDIMENT DURING ALL PHASES OF DEVELOPMENT.
12. SEEPS OR SPRINGS ENCOUNTERED DURING CONSTRUCTION SHALL BE HANDLED IN ACCORDANCE WITH THE STANDARD AND SPECIFICATION FOR SUBSURFACE DRAIN OR OTHER APPROVED METHOD.
13. ALL GRADED AREAS SHALL BE PERMANENTLY STABILIZED IMMEDIATELY FOLLOWING FINISHED GRADING.
14. STOCKPILES, BORROW AREAS AND SPOIL AREAS SHALL BE SHOWN ON THE PLANS AND SHALL BE SUBJECT TO THE PROVISIONS OF THIS STANDARD AND SPECIFICATION.
15. SEED ALL DISTURBED AREAS WHICH WILL REMAIN UNDISTURBED FOR A PERIOD OF 15 DAYS OR MORE AND WHICH WILL NOT BE UNDER CONSTRUCTION WITHIN 30 DAYS WITH TEMPORARY RYEGRASS COVER, AS FOLLOWS (METHOD OF SEEDING IS OPTIONAL):
    - A. LOOSEN SEEDBED BY DISCING TO A 4" DEPTH.
    - B. SEED WITH SUMMER – PERENNIAL OR ANNUAL RYEGRASS AT 30 LBS PER ACRE
      FALL/WINTER – AROOSTOOK WINTER RYE AT 100 LBS PER ACRE
    - C. MULCH WITH 2 TONS PER ACRE OF BLOWN AND CHOPPED HAY.
    - D. WHERE NOTED ON THE PLAN, AND ON SLOPES GREATER THAN OR EQUAL TO 3:1, PROVIDE SOIL STABILIZATION MATTING.
16. AFTER COMPLETION OF SITE CONSTRUCTION, FINE GRADE AND SPREAD TOPSOIL ON ALL LAWN AREAS AND SEED WITH PERMANENT LAWN MIX AS FOLLOWS (SEE LANDSCAPE PLAN FOR OTHER PLANTING INFORMATION):
    - A. LIME TOPSOIL TO pH 6.0.
    - B. FERTILIZE WITH 600 LBS PER ACRE OF 5–10–10.
    - C. SEED REQUIREMENTS – SEE LANDSCAPING PLAN.
    - D. MULCH AS DESCRIBED FOR TEMPORARY SEEDING (NOTE 15C ABOVE).
17. DURING THE PROGRESS OF CONSTRUCTION, AND ESPECIALLY AFTER RAIN EVENTS, MAINTAIN ALL SEDIMENT TRAPS, BARRIERS, AND FILTERS AS NECESSARY TO PREVENT THEIR BEING CLOGGED WITH SEDIMENT. RE–STABILIZE ANY AREAS THAT MAY HAVE ERODED.
18. MAINTAIN ALL SEEDED AND PLANTED AREAS TO INSURE A VIABLE STABILIZED VEGETATIVE COVER.
19. MAINTAIN COPIES OF THE CONSTRUCTION LOGBOOK, STORMWATER POLLUTION PREVENTATION PLAN (SWPPP) NOTICE OF INTENT (NOI), PERMITS, AND SITE PLANS ON–SITE AT ALL TIMES DURING CONSTRUCTION.
20. A RAIN GAUGE WILL BE MAINTAINED ON–SITE AT ALL TIMES. READINGS SHALL BE TAKEN ON A DAILY BASIS AND LOGGED.

CONSTRUCTION SEQUENCE

1. PRE–CONSTRUCTION MEETING: BEFORE CONSTRUCTION ACTIVITIES AN EVALUATION OF THE SITE WILL BE PERFORMED WITH THE SITE CONTRACTOR, TOWN PERSONNEL AND SITE DESIGN ENGINEER TO DISCUSS GENERAL CONSTRUCTION PROCEDURES AND SEQUENCING. DURING THIS MEETING SENSITIVE AREAS OF THE PROPERTY SHALL BE DELINEATED AND MARKED–OUT WITH ORANGE CONSTRUCTION FENCE (i.E.: TREES, WETLANDS, WELLS, ETC.).
2. DELINEATE TOTAL SITE DISTURBANCE LIMITS: PLACEMENT OF ORANGE CONSTRUCTION FENCING ALONG THE LIMIT OF DISTURBANCE THROUGHOUT THE SITE.
3. PROTECT EXISTING BUFFERS: PLACE EROSION CONTROL DEVICES (SILT FENCING, DIVERSION BERMS, ETC.) UPSTREAM OF ANY EXISTING WATERCOURSE WITHIN OR OUTSIDE OF CONSTRUCTION AREAS, PRIOR TO THE START OF ANY CONSTRUCTION.
4. CONSTRUCTION ENTRANCES/SILTATION CONTROLS: TEMPORARY CONSTRUCTION ENTRANCES WILL BE INSTALLED AT THE ENTRANCES TO THE SITE ON NYS ROUTE 17M AND ECHO LAKE ROAD AS SHOWN. DURING WET WEATHER, IT MAY NECESSARY TO WASH VEHICLE TIRES AT THIS LOCATION. THEREFORE, THIS ENTRANCE IS TO BE GRADED SO THAT RUNOFF IS DIRECTED TO THE ADJACENT SEDIMENT TRAP. IN ADDITION, ANY OTHER SILTATION CONTROL DEVICES, AS SHOWN ARE TO BE INSTALLED ADJACENT TO THE TEMPORARY ENTRANCE AND STAGING AREA. INSTALL TEMPORARY CULVERT DIVERTING THE EXISTING ROADSIDE SWALE AT THE NYS ROUTE 17M ENTRANCE.
5. CONSTRUCTION OF TEMPORARY SEDIMENT BASINS: CONSTRUCTION OF THE TEMPORARY SEDIMENT BASINS PRIOR TO THE START OF ANY MAJOR EARTHWORK MOVEMENT OR SITE CONSTRUCTION.
6. CONSTRUCTION OF TEMPORARY DIVERSION SWALES: THE INSTALLATION OF TEMPORARY DIVERSION SWALES TO CONVEY STORMWATER AROUND THE CONSTRUCTION AREA.
7. STAGING AREA: THE STAGING AREA WILL BE GRADED FOR STORAGE OF EQUIPMENT AND PLACEMENT OF CONSTRUCTION TRAILERS.
8. STRIP TOPSOIL: TOPSOIL WILL BE STRIPPED FROM THE ACTIVE WORK AREAS AND WILL BE STOCKPILED FOR LATER REUSE.
9. LAND GRADING: BULK SOIL GRADING WILL COMMENCE, SOIL TO BE MOVED FROM THE WESTERN SIDE OF THE PROJECT AREA AND PLACED IN THE FILL AREA ALONG THE EAST SIDE OF THE PROJECT AREA. AT THIS TIME, TEMPORARY STOCKPILE AREAS SHOULD BE UTILIZED. THE PRODUCTION FACILITY PAD AREA WILL BE GRADED.
10. BUILDING FOUNDATION CONSTRUCTION: UPON COMPLETION OF GRADING IN BUILDING FOOTPRINT AREA, BUILDING FOUNDATION CONSTRUCTION FOR THE PRODUCTION FACILITY BUILDING WILL COMMENCE.
11. UTILITY INSTALLATION: INSTALL WATER, SEWER, AND STORMWATER THROUGHOUT THE PROJECT. INLET PROTECTION WILL BE INSTALLED AT ALL STORMWATER CATCH BASINS.
12. PAVEMENT CONSTRUCTION: CONSTRUCT PAVED AREAS AND CONCRETE PARKING AREAS.
13. STORMWATER INSTALLATION: INSTALL POROUS PAVEMENT AREAS WHEN ALL CONTRIBUTING AREAS HAVE BEEN STABILIZED. CONVERT TEMPORARY SEDIMENT BASINS TO BIO–RETENTION AREAS WHEN ALL CONTRIBUTING AREAS HAVE BEEN STABILIZED. RIPRAP OUTLET PROTECTION AREAS WILL BE INSTALLED.
14. EROSION CONTROL PRACTICE REMOVAL: REMOVE ANY REMAINING EROSION CONTROL PRACTICES INCLUDING INLET PROTECTION, AND TEMPORARY DIVERSIONS SWALES WHEN AREAS HAVE BEEN TEMPORARILY STABILIZED.
15. LANDSCAPING AND FINAL STABILIZATION: ALL OPEN AREAS TO BE STABILIZED WITH TOPSOIL AND SEEDED AS PER THE SEEDING SCHEDULE SPECIFIED ON THE EROSION AND SEDIMENT CONTROL PLANS. REMOVAL OF ALL TEMPORARY MEASURES, FLUSHING/CLEANING OF ALL CATCH BASINS AND PIPE, AND REMOVAL AND DISPOSAL OF ALL TRAPPED SEDIMENT ON SITE SHALL BE COMPLETED.
16. FINAL SITE INSPECTION AND CERTIFICATION: AT THE END OF CONSTRUCTION A SITE EVALUATION OF THE SITE WILL BE PERFORMED WITH SITE CONTRACTOR, TOWN PERSONNEL, AND SITE ENGINEER TO ENSURE THAT ALL STORMWATER FACILITIES WERE CONSTRUCTED AS PER THE SWPPP DESIGN AND THAT THE SITE HAS BEEN STABILIZED. A NOTICE OF TERMINATION WILL BE SUBMITTED TO THE NYSDEC.

EROSION AND SEDIMENT CONTROL NOTES

1. THE OWNER OR OPERATOR SHALL HAVE A QUALIFIED INSPECTOR CONDUCT AT LEAST TWO (2) SITE INSPECTIONS IN ACCORDANCE WITH PART IV.C EVERY SEVEN (7) CALENDAR DAYS, FOR AS LONG AS GREATER THAN FIVE (5) ACRES OF SOIL REMAIN DISTURBED. THE TWO (2) INSPECTIONS SHALL BE SEPARATED BY A MINIMUM OF TWO (2) FULL CALENDAR DAYS.
2. IN AREAS WHERE SOIL DISTURBANCE ACTIVITY HAS BEEN TEMPORARILY OR PERMANENTLY CEASED, TEMPORARY AND/OR PERMANENT SOIL STABILIZATION MEASURES SHALL BE INSTALLED AND/OR IMPLEMENTED WITHIN SEVEN (7) DAYS FROM THE DATE OF SOIL DISTURBANCE ACTIVITY CEASED.
3. TEMPORARY STABILIZATION MEANS THAT EXPOSED SOIL HAS BEEN COVERED WITH MATERIALS AS SET FORTH IN THE TECHNICAL STANDARD, NEW YORK STANDARDS AND SPECIFICATIONS FOR EROSION AND SEDIMENT CONTROL, TO PREVENT THE EXPOSED SOIL FROM ERODING. THE MATERIALS CAN INCLUDE, BUT ARE NOT LIMITED TO, MULCH, SEED AND MULCH, AND EROSION CONTROL MATS (E.G. JUTE TWISTED YARN, EXCELSIOR WOOD FIBER MATS).
4. FINAL STABILIZATION MEANS THAT ALL SOIL DISTURBANCE ACTIVITIES HAVE CEASED AND A UNIFORM, PERENNIAL VEGETATIVE COVER WITH A DENSITY OF EIGHTY (80) PERCENT OVER THE ENTIRE PERVIOUS SURFACE HAS BEEN ESTABLISHED; OR OTHER EQUIVALENT STABILIZATION MEASURES, SUCH AS PERMANENT LANDSCAPE MULCHES, ROCK RIP–RAP OR WASHED/CRUSHED STONE HAVE BEEN APPLIED ON ALL DISTURBED AREAS THAT ARE NOT COVERED BY PERMANENT STRUCTURES, CONCRETE OR PAVEMENT.

SOIL RESTORATION REQUIREMENTS

1. ALL DISTURBED AREAS WHERE ONLY TOPSOIL STRIPPING HAS OCCURRED REQUIRE AERATION OF THE SUBGRADE BEFORE SPREADING TOPSOIL.
2. ALL DISTURBED ARES WHERE CUT AND FILL OPERATIONS OCCURRED REQUIRE FULL SOIL RESTORATION AS SPECIFIED IN NYSDEC MANUAL PUBLICATION ENTITLED "DEEP RIPPING AND DE–COMPACTION."

GRAPHIC SCALE

100 0 50 100 200 400

(IN FEET)
1 inch = 100 ft.

LEGEND

- PROPOSED LIMIT OF SOIL DISTURBANCE
- PROPOSED TEMPORARY SILTATION FENCE
- TEMPORARY SWALE
- PROPOSED TEMPORARY CATCH BASIN INLET PROTECTION
- PROPOSED TEMPORARY SEDIMENT TRAP
- PROPOSED CHECK DAM
- PROPOSED SLOPE STABILIZATION MATTING
- PROPOSED TEMPORARY LEVEL SPREADER
- TEMPORARY ORANGE CONSTRUCTION FENCE

LEGEND

- PROPERTY LINE
- ADJOINING PARCEL LINES
- 590 EXISTING MAJOR CONTOUR
- EXISTING MINOR CONTOUR
- EXISTING EASEMENT
- EXISTING WATERCOURSE
- EXISTING FEDERAL WETLAND BOUNDARY
- EXISTING NYS WETLAND BOUNDARY
- STREAM CORRIDOR AND RESERVOIR WATERSHED OVERLAY ZONING DISTRICT LIMIT
- FLOODPLAIN AND PONDING AREA OVERLAY
- 590 PROPOSED MAJOR CONTOUR
- 588 PROPOSED MINOR CONTOUR
- PROPOSED EDGE OF PAVEMENT
- PROPOSED RETAINING WALL
- PROPOSED DRAINAGE
- PROPOSED SWALE
- PROPOSED SANITARY SEWER
- PROPOSED WATER MAIN
- PROPOSED HYDRANT/VALVE
- PROPOSED DRAINAGE MANHOLE
- PROPOSED FLAT INLET CATCH BASINS
- PROPOSED CURB INLET CATCH BASIN

COPIES FROM THE ORIGINAL OF THIS DOCUMENT NOT MARKED WITH AN ORIGINAL OF THE PROFESSIONAL ENGINEER'S AND/OR LAND SURVEYOR'S STAMP OR EMBOSSED SEAL SHALL NOT BE CONSIDERED VALID, TRUE COPIES.

UNAUTHORIZED ALTERATION OR ADDITION TO THIS DOCUMENT IS A VIOLATION OF SECTION 7209–2 OF THE NEW YORK STATE EDUCATION LAW.

Dig Safely. New York. Call 811 before you dig

COPYRIGHT 2016, LANC & TULLY, P.C.

LANC & TULLY
ENGINEERING AND SURVEYING, P.C.
P.O. Box 687, Rt. 207
Goshen, N.Y. 10924
(845) 294–3700

MERLIN ENTERPRISES
FORREC
MASER CONSULTING P.A.

EROSION AND SEDIMENT CONTROL PLAN SHEET 3 OF 3

LEGOLAND NEW YORK
TOWN OF GOSHEN
ORANGE COUNTY, NEW YORK

Revisions:

No.	Description	Issue Date
1	PLAN DEVELOPMENT	SEPTEMBER 1, 2016
2	PLAN DEVELOPMENT	NOVEMBER 3, 2016
3	FEIS SITEPLAN	MAY 18, 2017

CAD File: 160042–Erosion	
Layout: EROSION 3	
Drawn By: ESR	Checked By: JOR
Scale: 1" = 100'	Project No.: 16–0042
Tax Map No.: SEE SHEET 2	
Date: JULY 21, 2016	
Sheet/Drawing No.: C 22 OF 40	

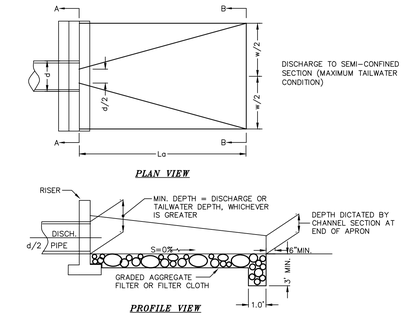

NOTE:
SEE RIPRAP STANDARDS AND SPECIFICATIONS
MAXIMUM TAILWATER CONDITIONS

RIP RAP OUTLET PROTECTION

NOT TO SCALE

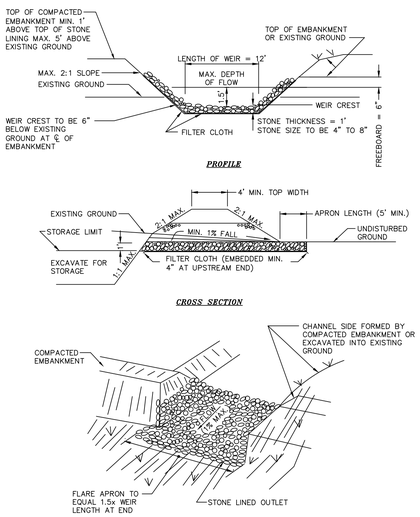

RIP-RAP OUTLET SEDIMENT TRAP

NOT TO SCALE

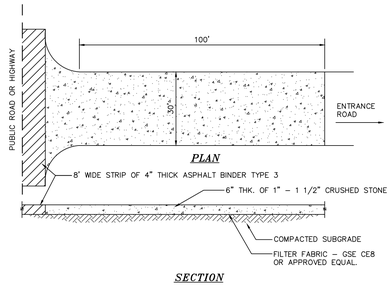

NOTE:
ENTRANCE SHALL BE MAINTAINED AS CONDITIONS DEMAND TO PREVENT TRACKING OF SEDIMENT ONTO PUBLIC RIGHTS OF WAY.

STABILIZED CONSTRUCTION ENTRANCE

NOT TO SCALE

ALL SEDIMENTATION STRUCTURES WILL BE INSPECTED AND MAINTAINED ON A REGULAR BASIS.

A CRUSHED STONE, VEHICLE WHEEL-CLEANING BLANKET WILL BE INSTALLED WHENEVER A CONSTRUCTION ACCESS ROAD INTERSECTS ANY PAVED ROADWAY. SAID BLANKET WILL BE COMPOSED OF 6" DEPTH OF 1"-1 1/2" CRUSHED STONE, WILL BE AT LEAST 30' X 100' AND SHOULD BE PLACED ON COMPACTED SUB-GRADE AND SHALL BE MAINTAINED.

PAVED ROADWAYS MUST BE KEPT CLEAN AT ALL TIMES.

ALL CATCH BASIN INLETS WILL BE PROTECTED WITH A CRUSHED STONE OR HAYBALE FILTER (FILTER DETAILS APPEAR ON PLAN).

ALL STORM DRAINAGE OUTLETS WILL BE STABILIZED, AS REQUIRED, BEFORE DISCHARGE POINTS BECOME OPERATIONAL.

ALL SOIL EROSION AND SEDIMENT CONTROL STRUCTURES MUST BE DETAILED ON THE PLAN.

CONSTRUCTION SPECIFICATIONS

1. THE AREA UNDER EMBANKMENT SHALL BE CLEARED, GRUBBED AND STRIPPED OF ANY VEGETATION AND ROOT MAT. THE POOL AREA SHALL BE CLEARED.
2. THE FILL MATERIAL FOR THE EMBANKMENT SHALL BE FREE OF ROOTS OR OTHER WOODY VEGETATION AS WELL AS OVER-SIZED STONES, ROCKS, ORGANIC MATERIAL OR OTHER OBJECTIONABLE MATERIAL. THE EMBANKMENT SHALL BE COMPACTED BY TRAVERSING WITH EQUIPMENT WHILE IT IS BEING CONSTRUCTED. MAXIMUM HEIGHT OF OF EMBANKMENT SHALL BE FIVE (5) FEET, MEASURED AT CENTERLINE OF EMBANKMENT.
3. ALL FILL SLOPES SHALL BE 2:1 OR FLATTER, CUT SLOPES 1:1 OR FLATTER.
4. ELEVATION OF THE TOP OF ANY DIKE DIRECTING WATER INTO TRAP MUST EQUAL OR EXCEED THE HEIGHT OF EMBANKMENT.
5. STORAGE AREA PROVIDED SHALL BE FIGURED BY COMPUTING THE VOLUME AVAILABLE BEHIND THE OUTLET CHANNEL UP TO AN ELEVATION OF ONE (1) FOOT BELOW THE LEVEL WEIR CREST.
6. FILTER CLOTH SHALL BE PLACED OVER THE BOTTOM AND SIDES OF THE OUTLET CHANNEL PRIOR TO PLACEMENT OF STONE. SECTIONS OF FABRIC MUST OVERLAP AT LEAST ONE (1) FOOT WITH SECTION NEAREST THE ENTRANCE PLACED ON TOP. FABRIC SHALL BE EMBEDDED AT LEAST SIX (6) INCHES INTO EXISTING GROUND AT ENTRANCE OUTLET CHANNEL.
7. STONE USED IN THE OUTLET CHANNEL SHALL BE FOUR (4) TO EIGHT (8) INCH RIPRAP. TO PROVIDE A FILTERING EFFECT, A LAYER OF FILTER CLOTH SHALL BE EMBEDDED ONE (1) FOOT WITH SECTION NEAREST ENTRANCE PLACED ON TOP. FABRIC SHALL BE EMBEDDED AT LEAST SIX (6) INCHES INTO EXISTING GROUND AT ENTRANCE OF OUTLET CHANNEL.
8. SEDIMENT SHALL BE REMOVED AND TRAP RESTORED TO ITS ORIGINAL DIMENSIONS WHEN SEDIMENT HAS ACCUMULATED TO 1/2 THE DESIGN DEPTH OF THE TRAP. REMOVED SEDIMENT SHALL BE DEPOSITED IN A SUITABLE AREA AND IN SUCH A MANNER THAT IT WILL NOT ERODE.
9. THE STRUCTURE SHALL BE INSPECTED AFTER EACH RAIN AND REPAIRED AS NEEDED.
10. CONSTRUCTION OPERATIONS SHALL BE CARRIED OUT IN SUCH A MANNER THAT EROSION AND WATER POLLUTION ARE MINIMIZED.
11. THE STRUCTURE SHALL BE REMOVED AND THE AREA STABILIZED WHEN DRAINAGE AREA HAS BEEN PROPERLY STABILIZED.
12. DRAINAGE AREA FOR THIS PRACTICE IS LIMITED TO 15 ACRES OR LESS.

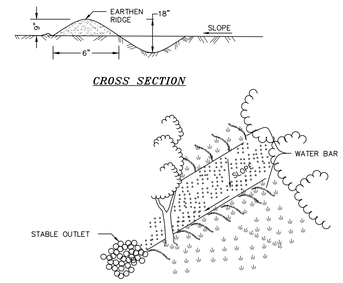

CONSTRUCTION SPECIFICATIONS

1. INSTALL THE WATER BAR AS SOON AS THE RIGHT OF WAY IS CLEARED AND GRADED.
2. DISK OR STRIP THE SOD FROM THE BASE FOR THE CONSTRUCTED RIDGE BEFORE PLACING FILL.
3. TRACK THE RIDGE TO COMPACT IT TO THE DESIGN CROSS SECTION.
4. THE OUTLET SHALL BE LOCATED ON AN UNDISTURBED AREA. FIELD SPACING WILL BE ADJUSTED TO USE THE MOST STABLE OUTLET AREAS. OUTLET PROTECTION WILL BE PROVIDED WHEN NATURAL AREAS ARE NOT ADEQUATE.
5. VEHICLE CROSSING SHALL BE STABILIZED WITH GRAVEL. EXPOSED AREAS SHALL BE IMMEDIATELY SEEDED AND MULCHED.
6. PERIODICALLY INSPECT WATER BARS FOR EROSION DAMAGE AND SEDIMENT. CHECK OUTLET AREAS AND MAKE REPAIRS AS NEEDED TO RESTORE OPERATION.

WATER BARS DETAIL

NOT TO SCALE

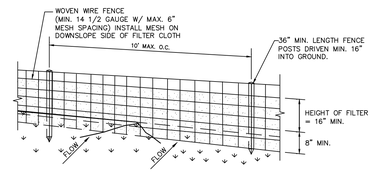

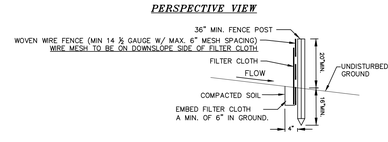

CONSTRUCTION SPECIFICATIONS

1. WOVEN WIRE FENCE TO BE FASTENED SECURELY TO FENCE POSTS WITH WIRE TIES OR STAPLES. POSTS SHALL BE STEEL EITHER "T" OR "U" TYPE OR HARDWOOD.
2. FILTER CLOTH TO BE TO BE FASTENED SECURELY TO WOVEN WIRE FENCE WITH TIES SPACED EVERY 24" AT TOP AND MID SECTION. FENCE SHALL BE WOVEN WIRE, 12 1/2 GAUGE, 6" MAXIMUM MESH OPENING.
3. WHEN TWO SECTIONS OF FILTER CLOTH ADJOIN EACH OTHER THEY SHALL BE OVER-LAPPED BY SIX INCHES AND FOLDED. FILTER CLOTH SHALL BE EITHER FILTER X, MIRAFI 100X, STABILINKA T140N, OR APPROVED EQUIVALENT.
4. PREFABRICATED UNITS SHALL BE GEOFAB, ENVIROFENCE, OR APPROVED EQUIVALENT.
5. MAINTENANCE SHALL BE PERFORMED AS NEEDED AND MATERIAL REMOVED WHEN "BULGES" DEVELOP IN THE SILT FENCE.

SILTATION FENCE

NOT TO SCALE

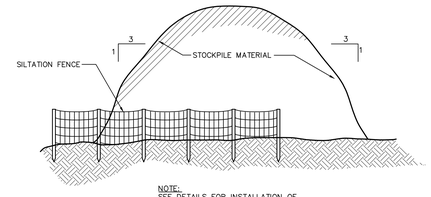

NOTE:
SEE DETAILS FOR INSTALLATION OF SILTATION FENCE

TYPICAL STOCKPILE DETAIL

NOT TO SCALE

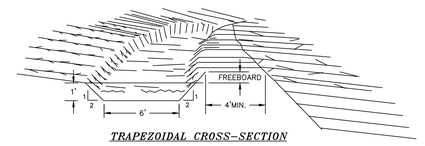

TRAPEZOIDAL CROSS-SECTION

CONSTRUCTION SPECIFICATIONS

1. ALL TREES, BRUSH, STUMPS, OBSTRUCTIONS, AND OTHER OBJECTIONABLE MATERIAL SHALL BE REMOVED AND DISPOSED OF SO AS NOT TO INTERFERE WITH THE PROPER FUNCTIONING OF THE DIVERSION.
2. THE DIVERSION SHALL BE EXCAVATED OR SHAPED TO LINE, GRADE, AND CROSS SECTION AS REQUIRED TO MEET THE CRITERIA SPECIFIED HEREIN, AND BE FREE OF BANK PROJECTIONS OR OTHER IRREGULARITIES WHICH WILL IMPEDE NORMAL FLOW.
3. FILLS SHALL BE COMPACTED AS NEEDED TO PREVENT UNEQUAL SETTLEMENT THAT WOULD CAUSE DAMAGE IN THE COMPLETE DIVERSION.
4. ALL EARTH REMOVED AND NOT NEEDED IN CONSTRUCTION SHALL BE STOCKPILED FOR RESTORATION OF THE AREA SO THAT IT WILL NOT INTERFERE WITH THE FUNCTIONING OF THE DIVERSION.
5. STABILIZATION SHALL BE DONE ACCORDING TO THE APPROPRIATE STANDARD AND SPECIFICATIONS FOR VEGETATIVE PRACTICES.
   A. FOR DESIGN VELOCITIES OF MORE THAN 3.5 FT. PER. SEC., THE DIVERSION SHALL BE STABILIZED WITH SOD, WITH SEEDING PROTECTED BY JUTE OR EXCELSIOR MATTING OR WITH SEEDING AND MULCHING INCLUDING TEMPORARY DIVERSION OF THE WATER UNTIL THE VEGETATION IS ESTABLISHED.

TEMPORARY DIVERSION SWALE

NOT TO SCALE

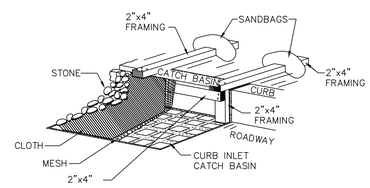

CONSTRUCTION SPECIFICATIONS

1. FILTER FABRIC SHALL HAVE AN EOS OF 40-85.
2. WOODEN FRAME SHALL BE CONSTRUCTED OF 2"x4" CONSTRUCTION GRADE LUMBER.
3. THE ASSEMBLY SHALL BE PLACED AGAINST THE INLET AND SECURED BY 2"x4" ANCHORS 2 FEET LONG EXTENDING ACROSS THE TOP OF THE CURB AND SIDEWALK AND HELD IN PLACE BY SANDBAGS OR ALTERNATE WEIGHTS.

MAXIMUM DRAINAGE AREA 1 ACRE

STORM DRAIN INLET FILTER DETAIL FOR CURB INLETS

NOT TO SCALE

NOTE:
SIZE DESIGNATION IS:
PSD-PIPE DIA. (EX., PSD-18=PIPE SLOPE DRAIN WITH 18"DIAM. PIPE.

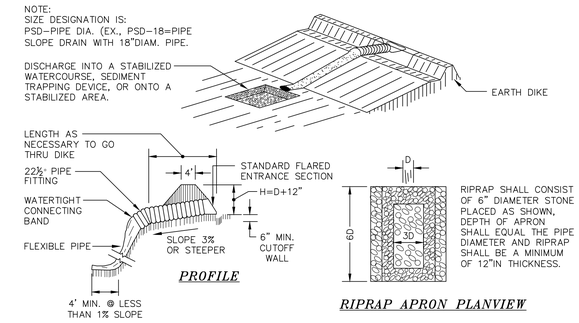

RIPRAP SHALL CONSIST OF 6" DIAMETER STONE PLACED AS SHOWN. DEPTH OF APRON SHALL EQUAL THE PIPE DIAMETER AND RIPRAP SHALL BE A MINIMUM OF 12"IN THICKNESS.

CONSTRUCTION SPECIFICATIONS

1. THE INLET PIPE SHALL HAVE A SLOPE OF 3% OR STEEPER.
2. THE TOP OF THE EARTH DIKE OVER THE INLET PIPE AND THOSE DIKES CARRYING WATER TO THE PIPE SHALL BE AT LEAST 1' HIGHER AT ALL POINTS THAN THE TOP OF THE INLET PIPE.
3. THE INLET PIPE SHALL BE CORRUGATED METAL PIPE WITH WATERTIGHT CONNECTING BANDS.
4. THE FLEXIBLE TUBING SHALL BE THE SAME DIAMETER AS THE INLET PIPE AND SHALL BE CONSTRUCTED OF A DURABLE MATERIAL WITH HOLD-DOWN GROMMETS SPACED AT 10' ON CENTER.
5. THE FLEXIBLE TUBING SHALL BE SECURELY FASTENED TO THE CORRUGATED METAL PIPE WITH METAL STRAPPING OR WATERTIGHT CONNECTING COLLARS.
6. THE FLEXIBLE TUBING SHALL BE SECURELY ANCHORED TO THE SLOPE BY STAKING AT THE GROMMETS PROVIDED.
7. A RIPRAP APRON SHALL BE PROVIDED AT THE OUTLET. THIS SHALL CONSIST OF 6" DIAMETER STONE PLACED AS SHOWN.
8. THE SOIL AROUND AND UNDER INLET PIPE AND ENTRANCE SECTION SHALL BE HAND TAMPED IN 4" LIFTS TO THE TOP OF EARTH DIKE.
9. FOLLOW-UP INSPECTION AND ANY NEEDED MAINTENANCE SHALL BE PERFORMED AFTER EACH STORM.

* DRAINAGE AREA MUST NOT EXCEED 5 ACRES.

PIPE SLOPE DRAIN FLEXIBLE DETAIL

NOT TO SCALE

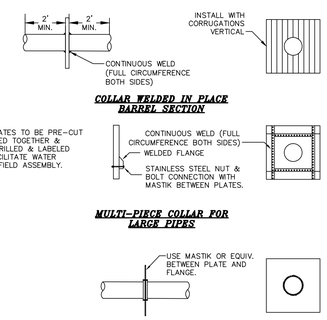

TYPICAL ANTI-SEEP COLLARS

NOT TO SCALE

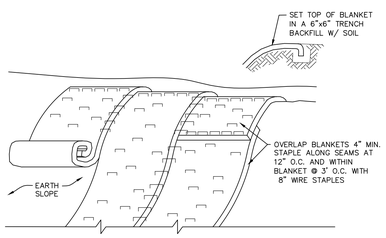

SLOPE STABILIZATION DETAIL

NOT TO SCALE

NOTES:

1. SLOPE STABILIZATION TO BE USED ON ALL CREATED OR DISTURBED SLOPES GREATER THAN 33% AND WHERE SPECIFIED ON THE EROSION AND SEDIMENT CONTROL PLAN.
2. STABILIZE PREPARED EARTHEN SLOPE WITH A BIODEGRADABLE NATURAL FIBER NETTING. APPROVED TYPES AS FOLLOWS:
   -S150BN - NORTH AMERICAN GREEN 1-800-772-2040
   -ECS-2B - EAST COAST EROSION BLANKET 1-800-582-4005
   -APPROVED EQUAL
3. ALL SLOPE RESTORATION MUST INCLUDE 4" TOPSOIL.
4. PREPARE THE SOIL SURFACE INCLUDING RAKING, SEEDING AND FERTILIZING PRIOR TO INSTALLING EROSION CONTROL NETTING.
5. AFTER NETTING IS INSTALLED, PLANT ANY PROPOSED LANDSCAPING/GROUND COVER THROUGH SLITS CUT IN FABRIC.

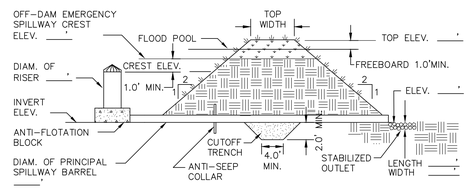

PRINCIPAL SPILLWAY PROFILE

MAXIMUM DRAINAGE AREA = 100 ACRES

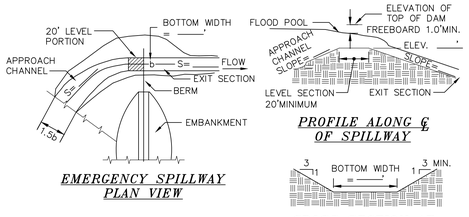

SEDIMENT BASIN DETAILS

NOT TO SCALE

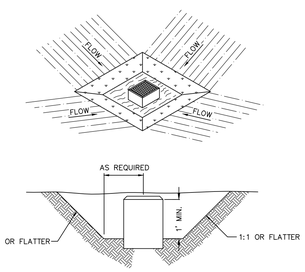

CATCH BASIN SEDIMENT TRAP

NOT TO SCALE

CONSTRUCTION SPECIFICATION FOR ST-III

1. SEDIMENT SHALL BE REMOVED AND THE TRAP RESTORED TO ITS ORIGINAL DIMENSIONS WHEN THE SEDIMENT HAS ACCUMULATED TO 1/2 THE DESIGN DEPTH OF THE TRAP. REMOVED SEDIMENT SHALL BE DEPOSITED IN A SUITABLE AREA AND IN SUCH A MANNER THAT IT WILL NOT ERODE.
2. THE VOLUME OF SEDIMENT STORAGE SHALL BE 3600 CUBIC FEET PER ACRE OF CONTRIBUTORY DRAINAGE. THE MAXIMUM DRAINAGE ARE IS 3 ACRES.
3. THE STRUCTURE SHALL BE INSPECTED AFTER EACH RAIN AND REPAIRS MADE AS NEEDED.
4. CONSTRUCTION OPERATIONS SHALL BE CARRIED OUT IN SUCH A MANNER THAT EROSION AND WATER POLLUTION SHALL BE MINIMIZED.
5. THE SEDIMENT TRAP SHALL BE REMOVED AND THE AREA STABILIZED WHEN THE CONSTRUCTED DRAINAGE AREA HAS BEEN PROPERLY STABILIZED.
6. ALL CUT SLOPES SHALL BE 1:1 OR FLATTER.

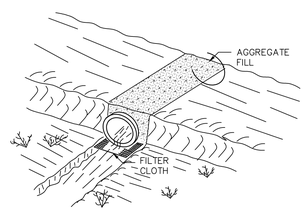

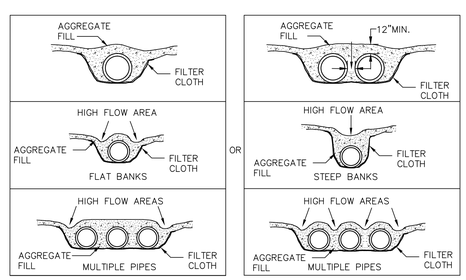

TEMPORARY ACCESS CULVERT DETAIL

NOT TO SCALE

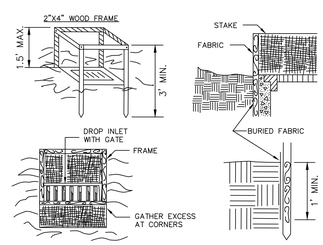

CONSTRUCTION SPECIFICATIONS

1. FILTER FABRIC SHALL HAVE AN EOS OF 40-85. BURLAP MAY BE USED FOR SHORT TERM APPLICATIONS.
2. CUT FABRIC FROM A CONTINUOUS ROLL TO ELIMINATE JOINTS. IF JOINTS ARE NEEDED THEY WILL BE OVERLAPPED TO THE NEXT STAKE.
3. STAKE MATERIALS WILL BE STANDARD 2"x4" WOOD OR EQUIVALENT. METAL WITH A MINIMUM LENGTH OF 3 FEET.
4. SPACE STAKES EVENLY AROUND INLET 3 FEET APART AND DRIVE A MINIMUM 18 INCHES DEEP. SPANS GREATER THAN 3 FEET MAY BE BRIDGED WITH THE USE OF WIRE MESH BEHIND THE FILTER FABRIC FOR SUPPORT.
5. FABRIC SHALL BE EMBEDDED 1 FOOT MINIMUM BELOW GROUND AND BACKFILLED. IT SHALL BE SECURELY FASTENED TO THE STAKES AND FRAME.
6. A 2"x4" WOOD FRAME SHALL BE COMPLETED AROUND THE CREST OF THE FABRIC FOR OVER FLOW STABILITY.

MAXIMUM DRAINAGE AREA 1 ACRE

FILTER FABRIC DROP INLET PROTECTION

NOT TO SCALE

COPYRIGHT 2016, LANC & TULLY, P.C.

LANC & TULLY
ENGINEERING AND SURVEYING, P.C.
P.O. Box 687, Rt. 207
Goshen, N.Y. 10924
(845) 294-3700

MERLIN ENTERTAINMENTS
FORREC
MASER CONSULTING P.A.

EROSION AND SEDIMENT CONTROL DETAILS

LEGOLAND NEW YORK
TOWN OF GOSHEN
ORANGE COUNTY, NEW YORK

Revisions:

No.	Description	Issue Date
1	PLAN DEVELOPMENT	SEPTEMBER 1, 2016
2	PLAN DEVELOPMENT	NOVEMBER 3, 2016
3	FEIS SITEPLAN	MAY 18, 2017

CAD File:	160042-CONST DETAILS
Layout:	EROSION DTLS
Drawn By: ESR	Checked By: JOR
Scale: N/A	Project No.: 16-0042
Tax Map No.:	SEE SHEET 2
Date:	JULY 21, 2016
Sheet/Drawing No.:	C 23 OF 40

COPIES FROM THE ORIGINAL OF THIS DOCUMENT NOT MARKED WITH AN ORIGINAL OF THE PROFESSIONAL ENGINEER'S AND/OR LAND SURVEYOR'S STAMP OR EMBOSSED SEAL SHALL NOT BE CONSIDERED VALID, TRUE COPIES.

UNAUTHORIZED ALTERATION OR ADDITION TO THIS DOCUMENT IS A VIOLATION OF SECTION 7209-2 OF THE NEW YORK STATE EDUCATION LAW.

Dig Safely. New York
Call 811 before you dig

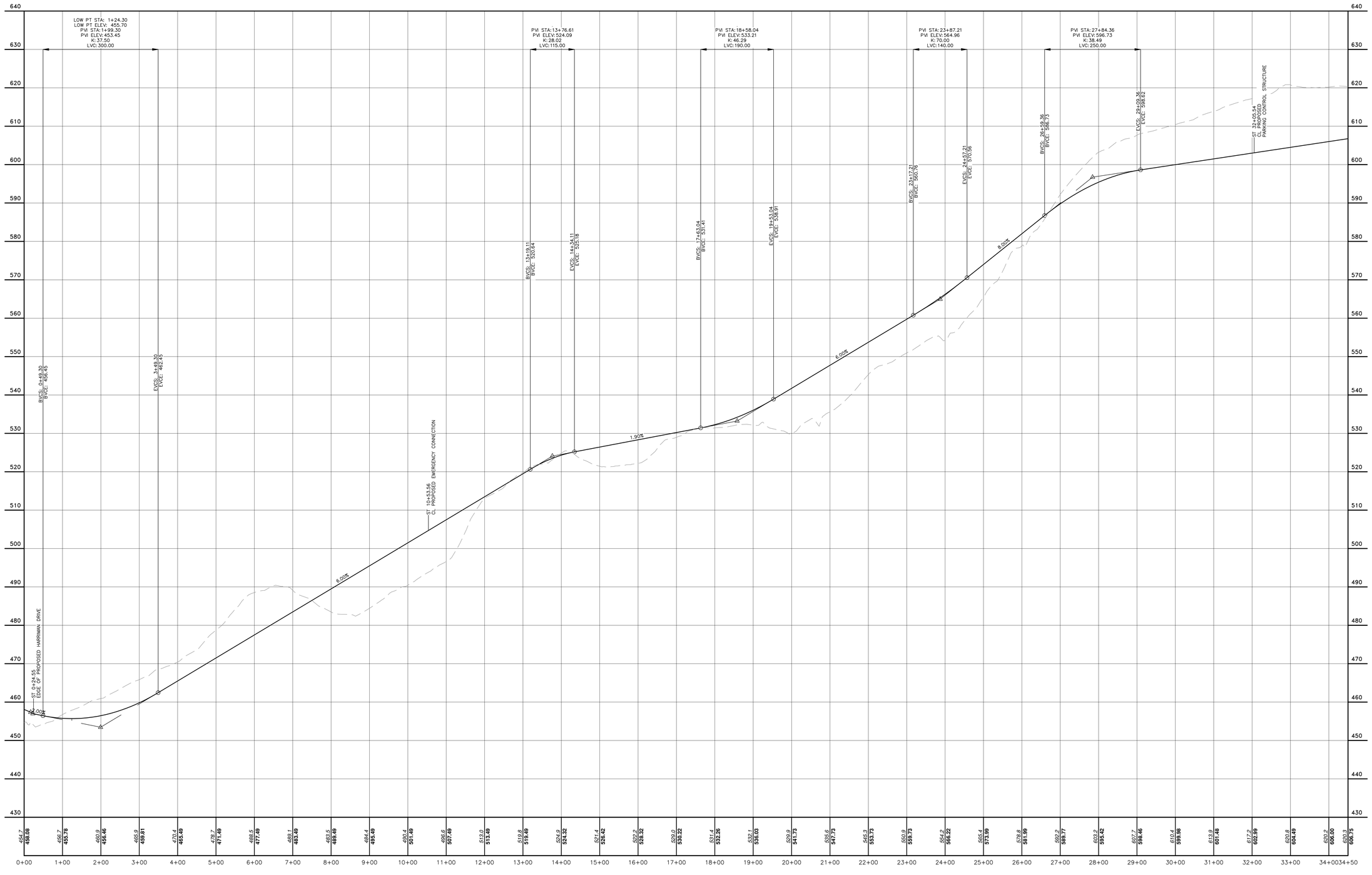

PROFILE: DAY GUEST ENTRANCE ROAD–PART 1
ST 0+00 THRU ST 34+50
SCALE: HORIZONTAL 1"=100'
VERTICAL 1"=10'

COPIES FROM THE ORIGINAL OF THIS DOCUMENT NOT MARKED WITH AN ORIGINAL OF THE PROFESSIONAL ENGINEER'S AND/OR LAND SURVEYOR'S STAMP OR EMBOSSED SEAL SHALL NOT BE CONSIDERED VALID, TRUE COPIES.

UNAUTHORIZED ALTERATION OR ADDITION TO THIS DOCUMENT IS A VIOLATION OF SECTION 7209–2 OF THE NEW YORK STATE EDUCATION LAW.

COPYRIGHT 2016, LANC & TULLY, P.C.

LANC & TULLY
ENGINEERING AND SURVEYING, P.C.
P.O. Box 687, Rt. 207
Goshen, N.Y. 10924
(845) 294–3700

MERLIN ENTERTAINMENTS
FORREC
MASER CONSULTING P.A.

PROFILE:
GUEST ENTRANCE ROAD
PART 1

LEGOLAND NEW YORK
TOWN OF GOSHEN
ORANGE COUNTY, NEW YORK

Revisions:

No.	Description	Issue Date
1	PLAN DEVELOPMENT	SEPTEMBER 1, 2016
2	PLAN DEVELOPMENT	NOVEMBER 3, 2016
3	FEIS SITEPLAN	MAY 18, 2017

CAD File: 160042–PROFILES	
Layout: GUEST RD 1	
Drawn By: MK	Checked By: JOR
Scale: AS NOTED	Project No.: 16–0042
Tax Map No.: SEE SHEET 2	
Date: JULY 21, 2016	
Sheet/Drawing No.: C 24 OF 40	

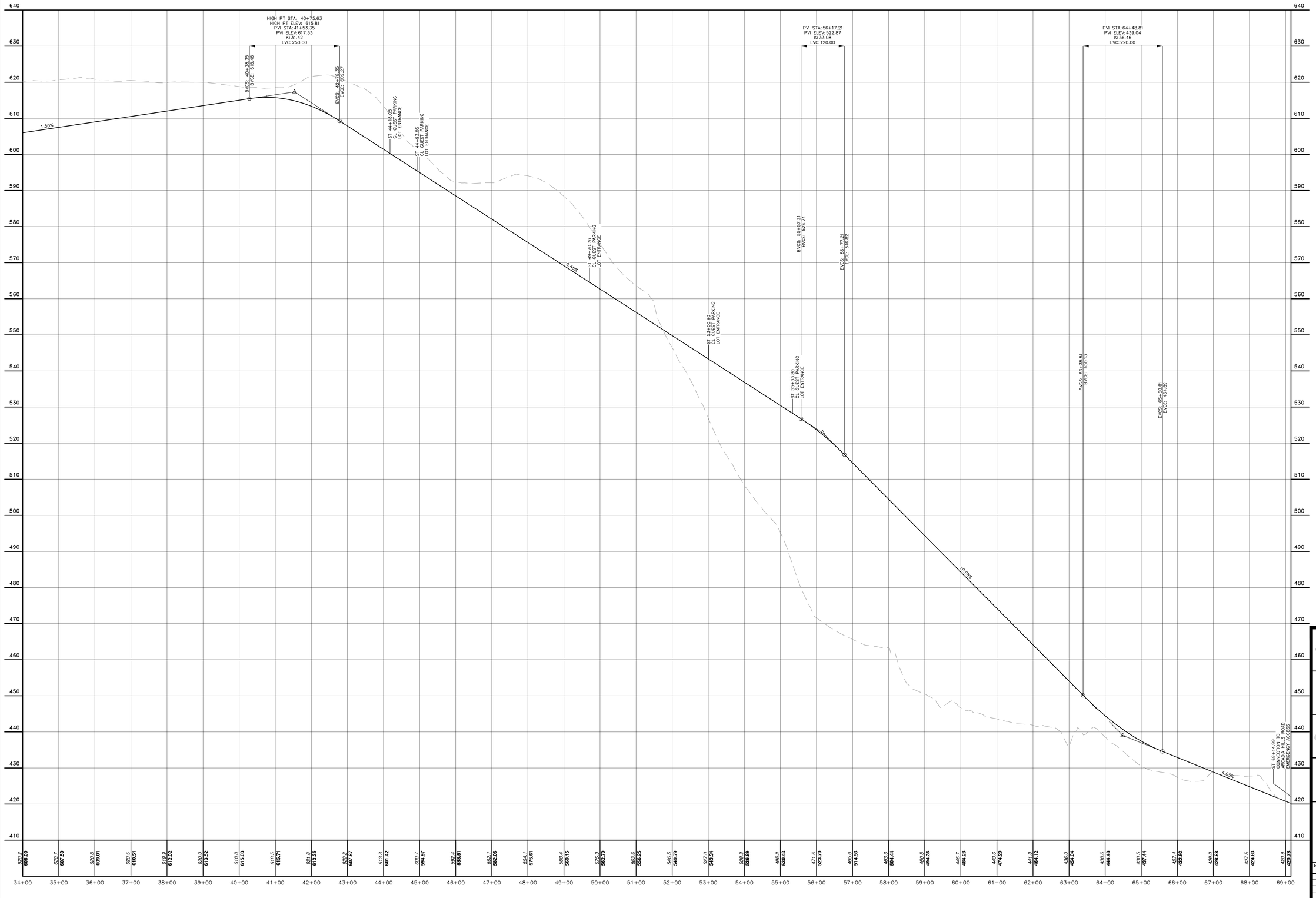

PROFILE: DAY GUEST ENTRANCE ROAD–PART 2
ST 34+00 THRU ST 69+15
SCALE: HORIZONTAL 1"=100'
VERTICAL 1"=10'

COPIES FROM THE ORIGINAL OF THIS DOCUMENT NOT MARKED WITH AN ORIGINAL OF THE PROFESSIONAL ENGINEER'S AND/OR LAND SURVEYOR'S STAMP OR EMBOSSED SEAL SHALL NOT BE CONSIDERED VALID, TRUE COPIES.

UNAUTHORIZED ALTERATION OR ADDITION TO THIS DOCUMENT IS A VIOLATION OF SECTION 7209-2 OF THE NEW YORK STATE EDUCATION LAW.

COPYRIGHT 2016, LANC & TULLY, P.C.

LANC & TULLY
ENGINEERING AND SURVEYING, P.C.
P.O. Box 687, Rt. 207
Goshen, N.Y. 10924
(845) 294-3700

MERLIN ENTERTAINMENTS
FORREC
MASER CONSULTING P.A.

PROFILE:
GUEST ENTRANCE ROAD
PART 2

LEGOLAND NEW YORK
TOWN OF GOSHEN
ORANGE COUNTY, NEW YORK

Revisions:

No.	Description	Issue Date
1	PLAN DEVELOPMENT	SEPTEMBER 1, 2016
2	PLAN DEVELOPMENT	NOVEMBER 3, 2016
3	FEIS SITEPLAN	MAY 18, 2017

CAD File: 160042-PROFILES	
Layout: GUEST RD 2	
Drawn By: MK	Checked By: JOR
Scale: AS NOTED	Project No.: 16-0042
Tax Map No.: SEE SHEET 2	
Date: JULY 21, 2016	
Sheet/Drawing No.: C 25 OF 40	

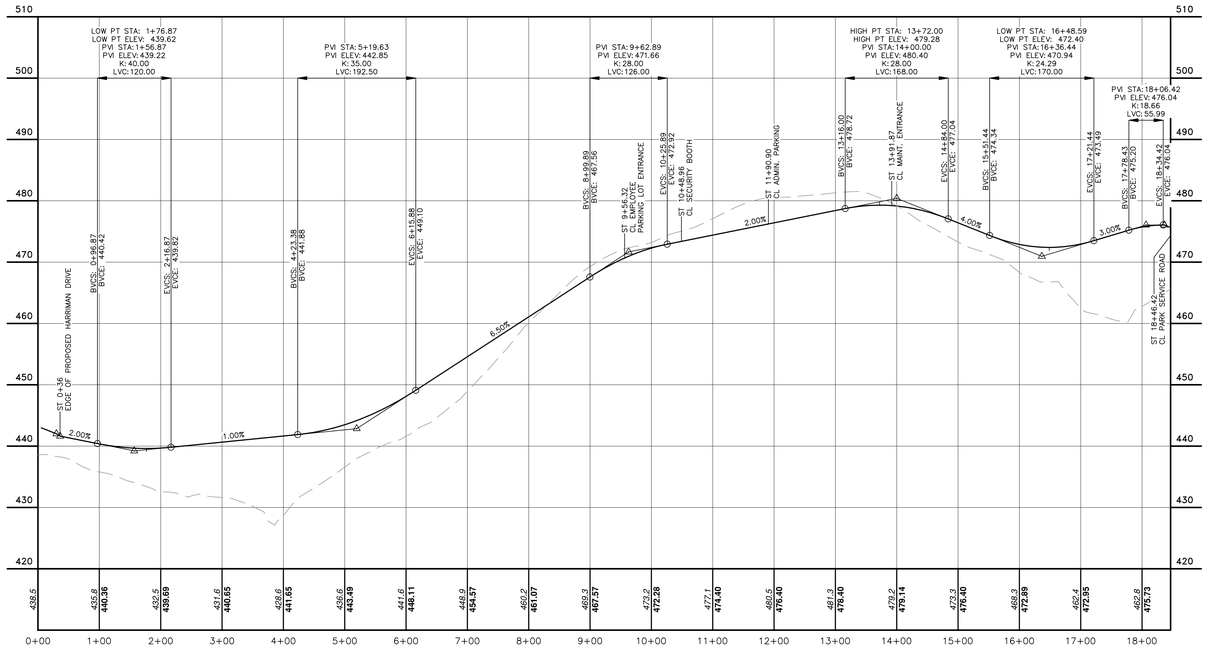

PROFILE: BACK OF HOUSE ENTRANCE ROAD
ST 0+00 THRU ST 18+46.42
SCALE: HORIZONTAL 1"=100'
VERTICAL 1"=10'

COPIES FROM THE ORIGINAL OF THIS DOCUMENT NOT MARKED WITH AN ORIGINAL OF THE PROFESSIONAL ENGINEER'S AND/OR LAND SURVEYOR'S STAMP OR EMBOSSED SEAL SHALL NOT BE CONSIDERED VALID, TRUE COPIES.

UNAUTHORIZED ALTERATION OR ADDITION TO THIS DOCUMENT IS A VIOLATION OF SECTION 7209-2 OF THE NEW YORK STATE EDUCATION LAW.

COPYRIGHT 2016, LANC & TULLY, P.C.

LANC & TULLY
ENGINEERING AND SURVEYING, P.C.
P.O. Box 687, Rt. 207
Goshen, N.Y. 10924
(845) 294-3700

MERLIN ENTERTAINMENTS
FORREC
MASER CONSULTING P.A.

PROFILE:
BACK OF HOUSE
ENTRANCE ROAD

LEGOLAND NEW YORK
TOWN OF GOSHEN
ORANGE COUNTY, NEW YORK

Revisions:

No.	Description	Issue Date
1	PLAN DEVELOPMENT	SEPTEMBER 1, 2016
2	PLAN DEVELOPMENT	NOVEMBER 3, 2016
3	FEIS SITEPLAN	MAY 18, 2017

CAD File: 160042-PROFILES	
Layout: BOH ENT	
Drawn By: MK	Checked By: JOR
Scale: AS NOTED	Project No.: 16-0042
Tax Map No.: SEE SHEET 2	
Date: JULY 21, 2016	
Sheet/Drawing No.: C 26 OF 40	

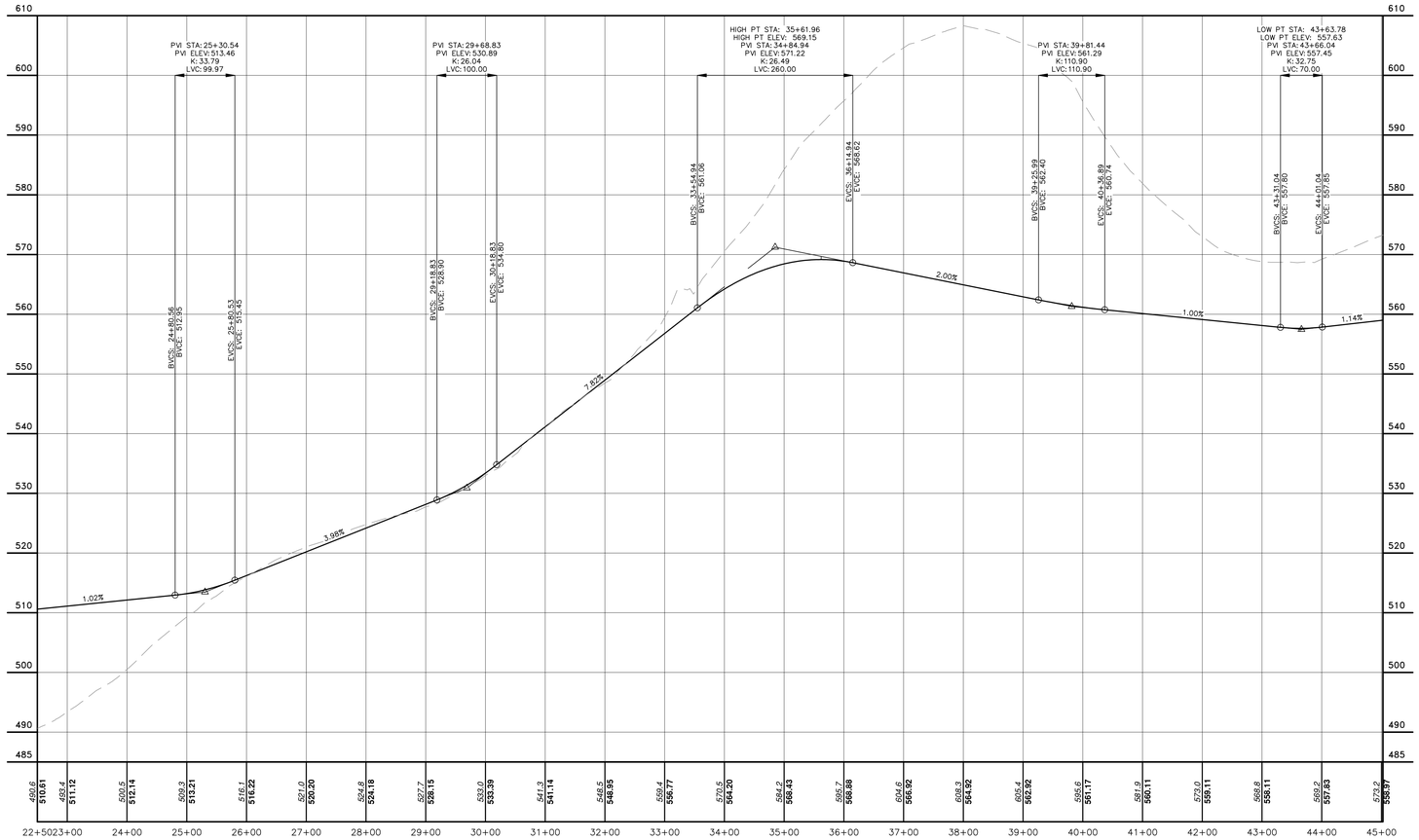

PROFILE: INTERIOR PARK SERVICE ROAD–PART 2
ST 22+50 THRU ST 45+02.45
SCALE: HORIZONTAL 1"=100'
VERTICAL 1"=10'

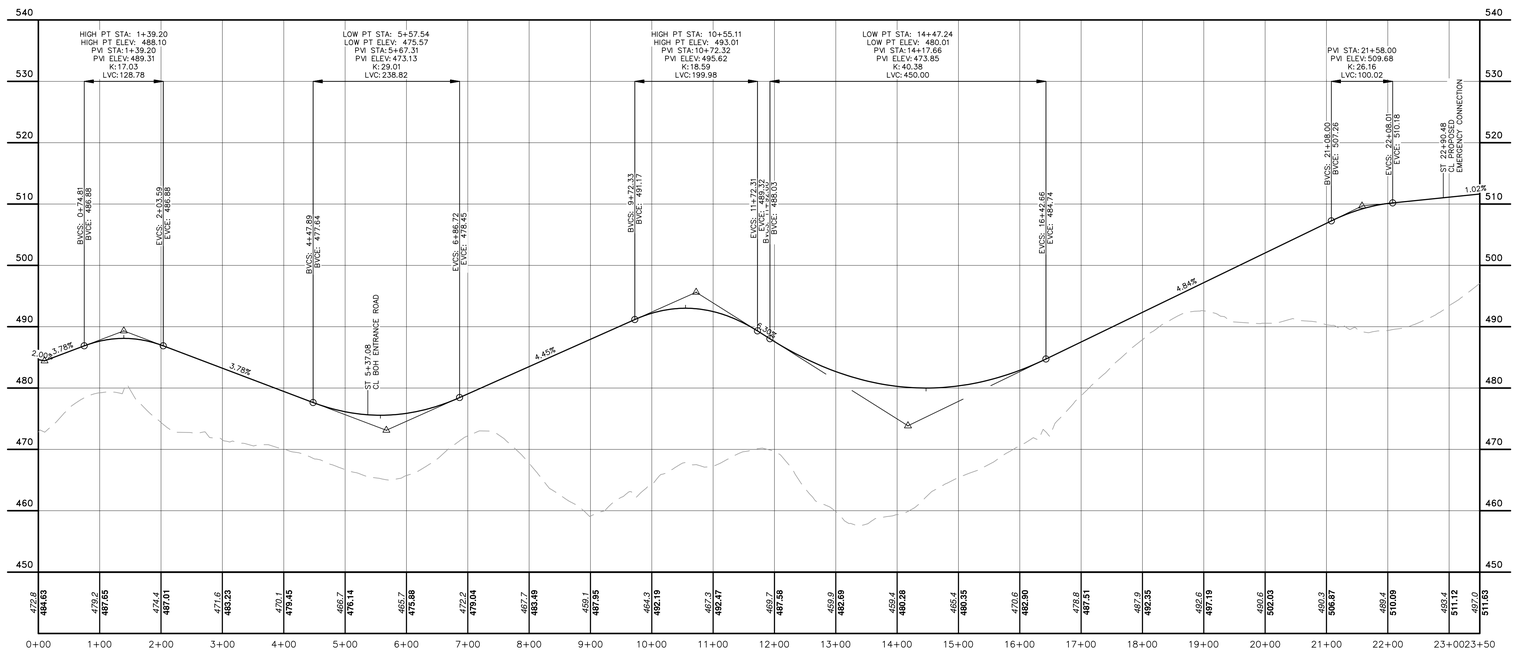

PROFILE: INTERIOR PARK SERVICE ROAD–PART 1
ST 0+00 THRU ST 23+50
SCALE: HORIZONTAL 1"=100'
VERTICAL 1"=10'

COPYRIGHT 2016, LANC & TULLY, P.C.

LANC & TULLY
ENGINEERING AND SURVEYING, P.C.
P.O. Box 687, Rt. 207
Goshen, N.Y. 10924
(845) 294-3700

MERLIN ENTERTAINMENTS
FORREC
MASER CONSULTING P.A.

PROFILE:
INTERIOR PARK SERVICE ROAD

LEGOLAND NEW YORK
TOWN OF GOSHEN
ORANGE COUNTY, NEW YORK

Revisions:

No.	Description	Issue Date
1	PLAN DEVELOPMENT	SEPTEMBER 1, 2016
2	PLAN DEVELOPMENT	NOVEMBER 3, 2016
3	FEIS SITEPLAN	MAY 18, 2017

CAD File: 160042-PROFILES	
Layout: SRVC ROAD	
Drawn By: MK	Checked By: JOR
Scale: AS NOTED	Project No.: 16-0042
Tax Map No.: SEE SHEET 2	
Date: JULY 21, 2016	
Sheet/Drawing No.: C 27 OF 40	

COPIES FROM THE ORIGINAL OF THIS DOCUMENT NOT MARKED WITH AN ORIGINAL OF THE PROFESSIONAL ENGINEER'S AND/OR LAND SURVEYOR'S STAMP OR EMBOSSED SEAL SHALL NOT BE CONSIDERED VALID, TRUE COPIES.

UNAUTHORIZED ALTERATION OR ADDITION TO THIS DOCUMENT IS A VIOLATION OF SECTION 7209-2 OF THE NEW YORK STATE EDUCATION LAW.

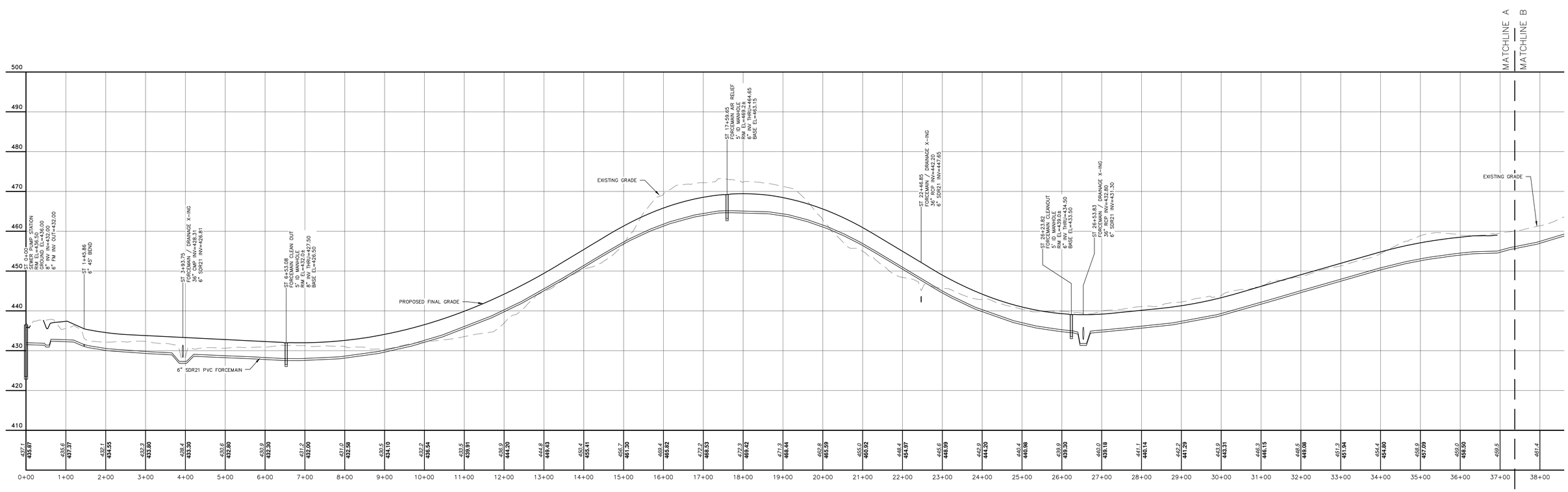

PROPOSED FORCEMAIN – LEGOLAND
ST 0+00 THRU ST 40+61.47
SCALE: HORIZONTAL 1"=100'
VERTICAL 1"=10'

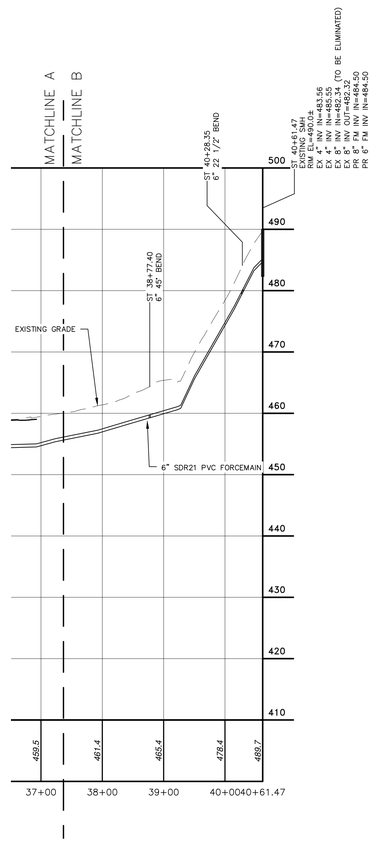

COPYRIGHT 2016, LANC & TULLY, P.C.

LANC & TULLY
ENGINEERING AND SURVEYING, P.C.
P.O. Box 687, Rt. 207
Goshen, N.Y. 10924
(845) 294-3700

MERLIN ENTERTAINMENTS
FORREC
MASER CONSULTING P.A.

PROFILE: LEGOLAND
SANITARY SEWER
FORCEMAIN

LEGOLAND NEW YORK
TOWN OF GOSHEN
ORANGE COUNTY, NEW YORK

Revisions:

No.	Description	Issue Date
1	PLAN DEVELOPMENT	SEPTEMBER 1, 2016
2	PLAN DEVELOPMENT	NOVEMBER 3, 2016
3	FEIS SITEPLAN	MAY 18, 2017

CAD File: 160042-PROFILES
Layout: LEGO-FM PROFILE
Drawn By: DMK
Checked By: JOR
Scale: AS NOTED
Project No.: 16-0042
Tax Map No.: SEE SHEET 2
Date: JULY 21, 2016
Sheet/Drawing No.: C 28 OF 40

COPIES FROM THE ORIGINAL OF THIS DOCUMENT NOT MARKED WITH AN ORIGINAL OF THE PROFESSIONAL ENGINEER'S AND/OR LAND SURVEYOR'S STAMP OR EMBOSSED SEAL SHALL NOT BE CONSIDERED VALID, TRUE COPIES.

UNAUTHORIZED ALTERATION OR ADDITION TO THIS DOCUMENT IS A VIOLATION OF SECTION 7209-2 OF THE NEW YORK STATE EDUCATION LAW.

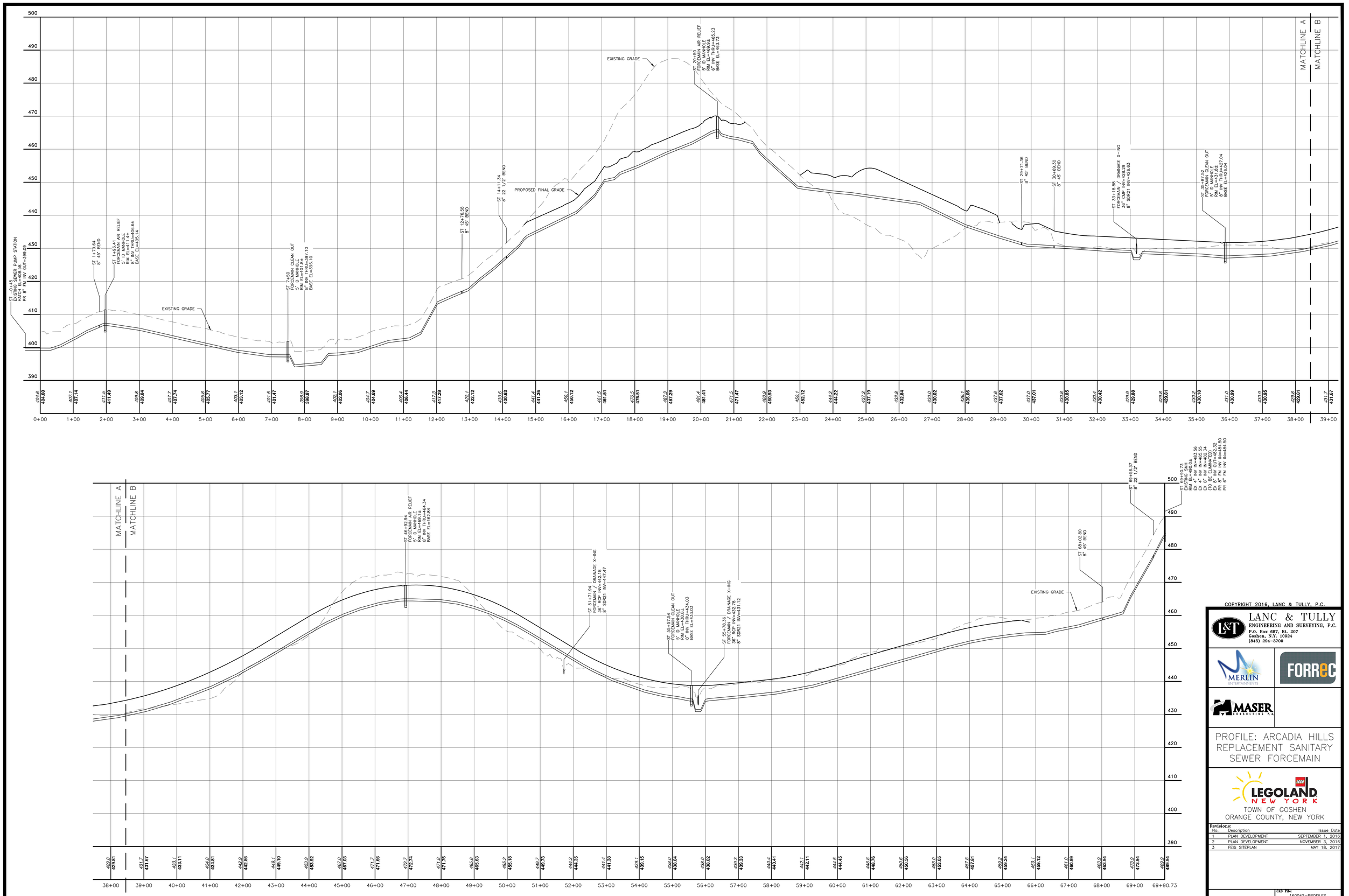

COPIES FROM THE ORIGINAL OF THIS DOCUMENT NOT MARKED WITH AN ORIGINAL OF THE PROFESSIONAL ENGINEER'S AND/OR LAND SURVEYOR'S STAMP OR EMBOSSED SEAL SHALL NOT BE CONSIDERED VALID, TRUE COPIES.

UNAUTHORIZED ALTERATION OR ADDITION TO THIS DOCUMENT IS A VIOLATION OF SECTION 7209-2 OF THE NEW YORK STATE EDUCATION LAW.

PROPOSED FORCEMAIN – ARCADIA HILLS
ST 0+00 THRU ST 69+90.73
SCALE: HORIZONTAL 1"=100'
VERTICAL 1"=10'

COPYRIGHT 2016, LANC & TULLY, P.C.

LANC & TULLY
ENGINEERING AND SURVEYING, P.C.
P.O. Box 687, Rt. 207
Goshen, N.Y. 10924
(845) 294-3700

MERLIN ENTERTAINMENTS
FORREC
MASER CONSULTING P.A.

PROFILE: ARCADIA HILLS
REPLACEMENT SANITARY
SEWER FORCEMAIN

LEGOLAND NEW YORK
TOWN OF GOSHEN
ORANGE COUNTY, NEW YORK

Revisions:

No.	Description	Issue Date
1	PLAN DEVELOPMENT	SEPTEMBER 1, 2016
2	PLAN DEVELOPMENT	NOVEMBER 3, 2016
3	FEIS SITEPLAN	MAY 18, 2017

CAD File: 160042-PROFILES	
Layout: ARC-FM PROFILE	
Drawn By: DMK	Checked By: JOR
Scale: AS NOTED	Project No.: 16-0042
Tax Map No.: SEE SHEET 2	
Date: JULY 21, 2016	
Sheet/Drawing No.: C 29 OF 40	

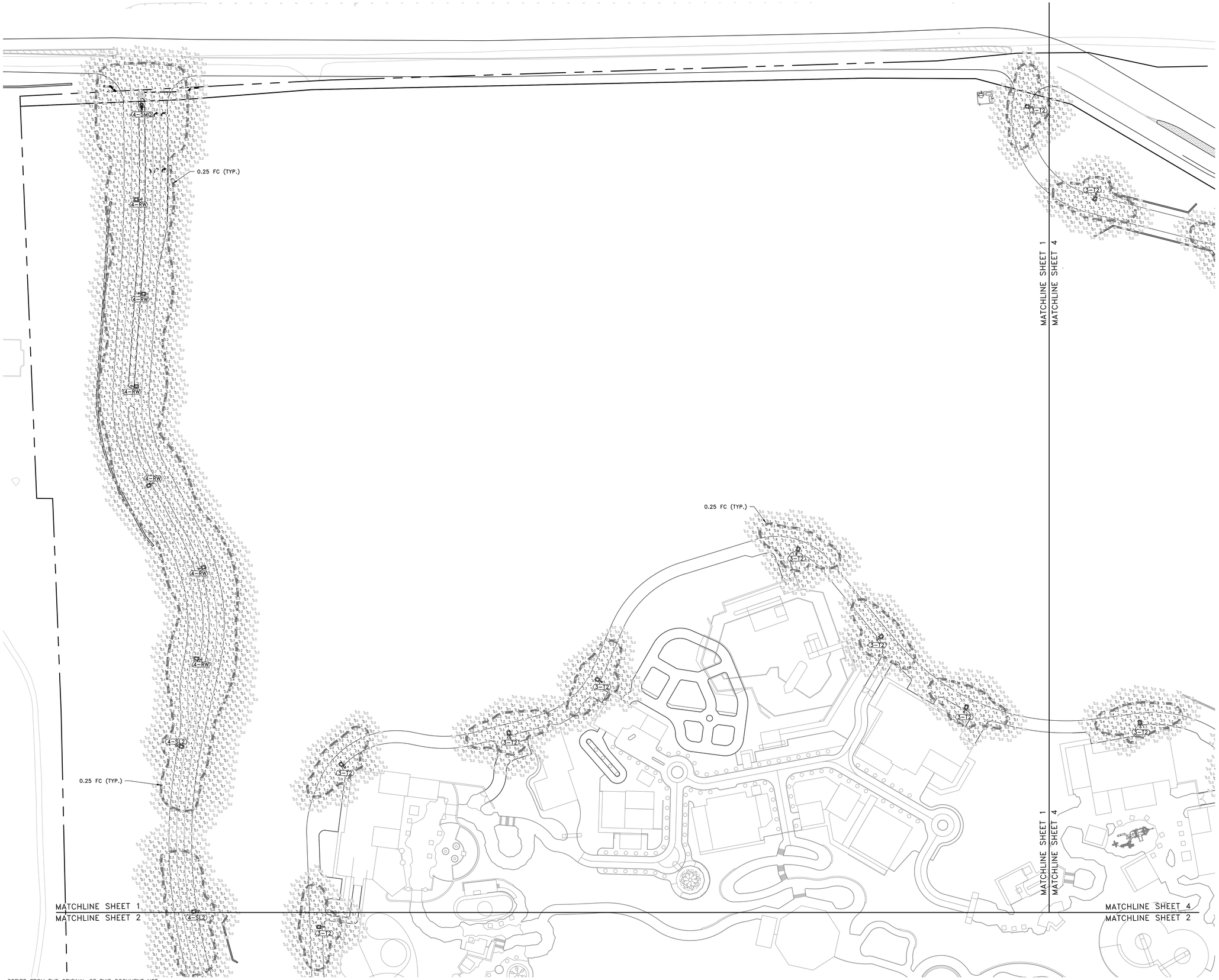

LEGEND

- PROPERTY LINE
- ADJOINING PARCEL LINES
- 590 — EXISTING MAJOR CONTOUR
- EXISTING MINOR CONTOUR
- EXISTING EASEMENT
- EXISTING WATERCOURSE
- EXISTING FEDERAL WETLAND BOUNDARY
- EXISTING NYS WETLAND BOUNDARY
- STREAM CORRIDOR AND RESERVOIR WATERSHED OVERLAY ZONING DISTRICT LIMIT
- FLOODPLAIN AND PONDING AREA OVERLAY
- 590 — PROPOSED MAJOR CONTOUR
- 588 — PROPOSED MINOR CONTOUR
- PROPOSED EDGE OF PAVEMENT
- PROPOSED RETAINING WALL
- PROPOSED DRAINAGE
- PROPOSED SWALE
- PROPOSED SANITARY SEWER
- PROPOSED WATER MAIN
- PROPOSED HYDRANT/VALVE
- PROPOSED DRAINAGE MANHOLE
- PROPOSED FLAT INLET CATCH BASINS
- PROPOSED CURB INLET CATCH BASIN

GRAPHIC SCALE

60 0 30 60 120 240

(IN FEET)
1 inch = 60 ft.

COPYRIGHT 2016, LANC & TULLY, P.C.

LANC & TULLY
ENGINEERING AND SURVEYING, P.C.
P.O. Box 687, Rt. 207
Goshen, N.Y. 10924
(845) 294-3700

MERLIN ENTERTAINMENTS

FORREC

MASER CONSULTING P.A.

ROADWAY & PARKING AREA LIGHTING PLAN SHEET 1 OF 4

LEGOLAND NEW YORK

TOWN OF GOSHEN
ORANGE COUNTY, NEW YORK

Revisions:

No.	Description	Issue Date
1	PLAN DEVELOPMENT	SEPTEMBER 1, 2016
2	PLAN DEVELOPMENT	NOVEMBER 3, 2016
3	FEIS SITEPLAN	MAY 18, 2017

CAD File: 160042-Lighting	
Layout: LIGHT 1	
Drawn By: MK	Checked By: JOR
Scale: 1" = 60'	Project No.: 16-0042
Tax Map No.: SEE SHEET 2	
Date: JULY 21, 2016	
Sheet/Drawing No.: C 30 OF 40	

COPIES FROM THE ORIGINAL OF THIS DOCUMENT NOT MARKED WITH AN ORIGINAL OF THE PROFESSIONAL ENGINEER'S AND/OR LAND SURVEYOR'S STAMP OR EMBOSSED SEAL SHALL NOT BE CONSIDERED VALID, TRUE COPIES.

UNAUTHORIZED ALTERATION OR ADDITION TO THIS DOCUMENT IS A VIOLATION OF SECTION 7209-2 OF THE NEW YORK STATE EDUCATION LAW.

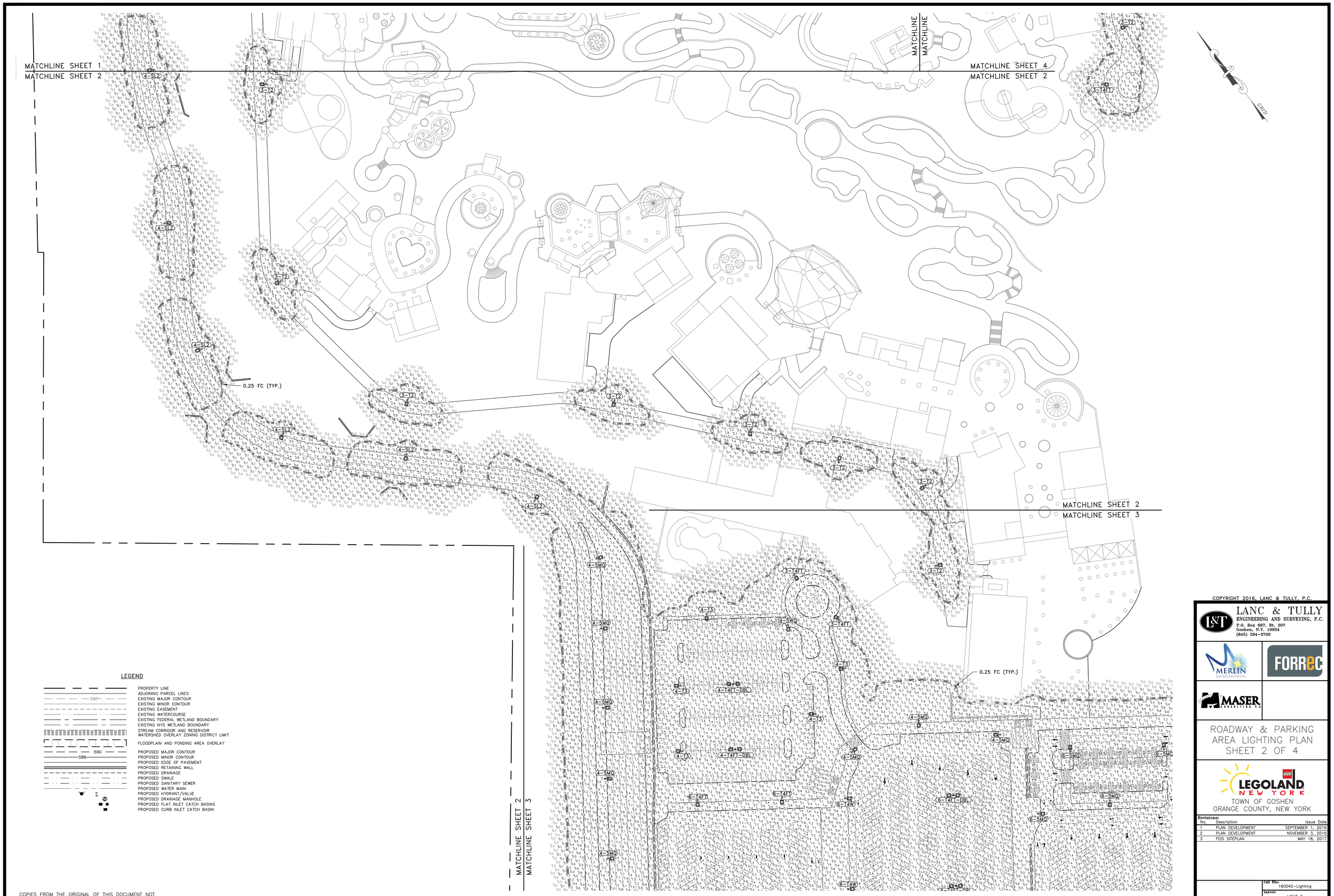

LEGEND

- PROPERTY LINE
- ADJOINING PARCEL LINES
- 590 — EXISTING MAJOR CONTOUR
- EXISTING MINOR CONTOUR
- EXISTING EASEMENT
- EXISTING WATERCOURSE
- EXISTING FEDERAL WETLAND BOUNDARY
- EXISTING NYS WETLAND BOUNDARY
- STREAM CORRIDOR AND RESERVOIR WATERSHED OVERLAY ZONING DISTRICT LIMIT
- FLOODPLAIN AND PONDING AREA OVERLAY
- 590 — PROPOSED MAJOR CONTOUR
- 588 — PROPOSED MINOR CONTOUR
- PROPOSED EDGE OF PAVEMENT
- PROPOSED RETAINING WALL
- PROPOSED DRAINAGE
- PROPOSED SWALE
- PROPOSED SANITARY SEWER
- PROPOSED WATER MAIN
- PROPOSED HYDRANT/VALVE
- PROPOSED DRAINAGE MANHOLE
- PROPOSED FLAT INLET CATCH BASINS
- PROPOSED CURB INLET CATCH BASIN

GRAPHIC SCALE

60 0 30 60 120 240

(IN FEET)
1 inch = 60 ft.

COPIES FROM THE ORIGINAL OF THIS DOCUMENT NOT MARKED WITH AN ORIGINAL OF THE PROFESSIONAL ENGINEER'S AND/OR LAND SURVEYOR'S STAMP OR EMBOSSED SEAL SHALL NOT BE CONSIDERED VALID, TRUE COPIES.

UNAUTHORIZED ALTERATION OR ADDITION TO THIS DOCUMENT IS A VIOLATION OF SECTION 7209-2 OF THE NEW YORK STATE EDUCATION LAW.

COPYRIGHT 2016, LANC & TULLY, P.C.

LANC & TULLY
ENGINEERING AND SURVEYING, P.C.
P.O. Box 687, Rt. 207
Goshen, N.Y. 10924
(845) 294-3700

MERLIN ENTERPRISES

FORREC

MASER CONSULTING P.A.

ROADWAY & PARKING AREA LIGHTING PLAN SHEET 2 OF 4

LEGOLAND NEW YORK

TOWN OF GOSHEN
ORANGE COUNTY, NEW YORK

Revisions:

No.	Description	Issue Date
1	PLAN DEVELOPMENT	SEPTEMBER 1, 2016
2	PLAN DEVELOPMENT	NOVEMBER 3, 2016
3	FEIS SITEPLAN	MAY 18, 2017

CAD File: 160042-Lighting	
Layout: LIGHT 2	
Drawn By: MK	Checked By: JOR
Scale: 1" = 60'	Project No.: 16-0042
Tax Map No.: SEE SHEET 2	
Date: JULY 21, 2016	
Sheet/Drawing No.: C 31 OF 40	

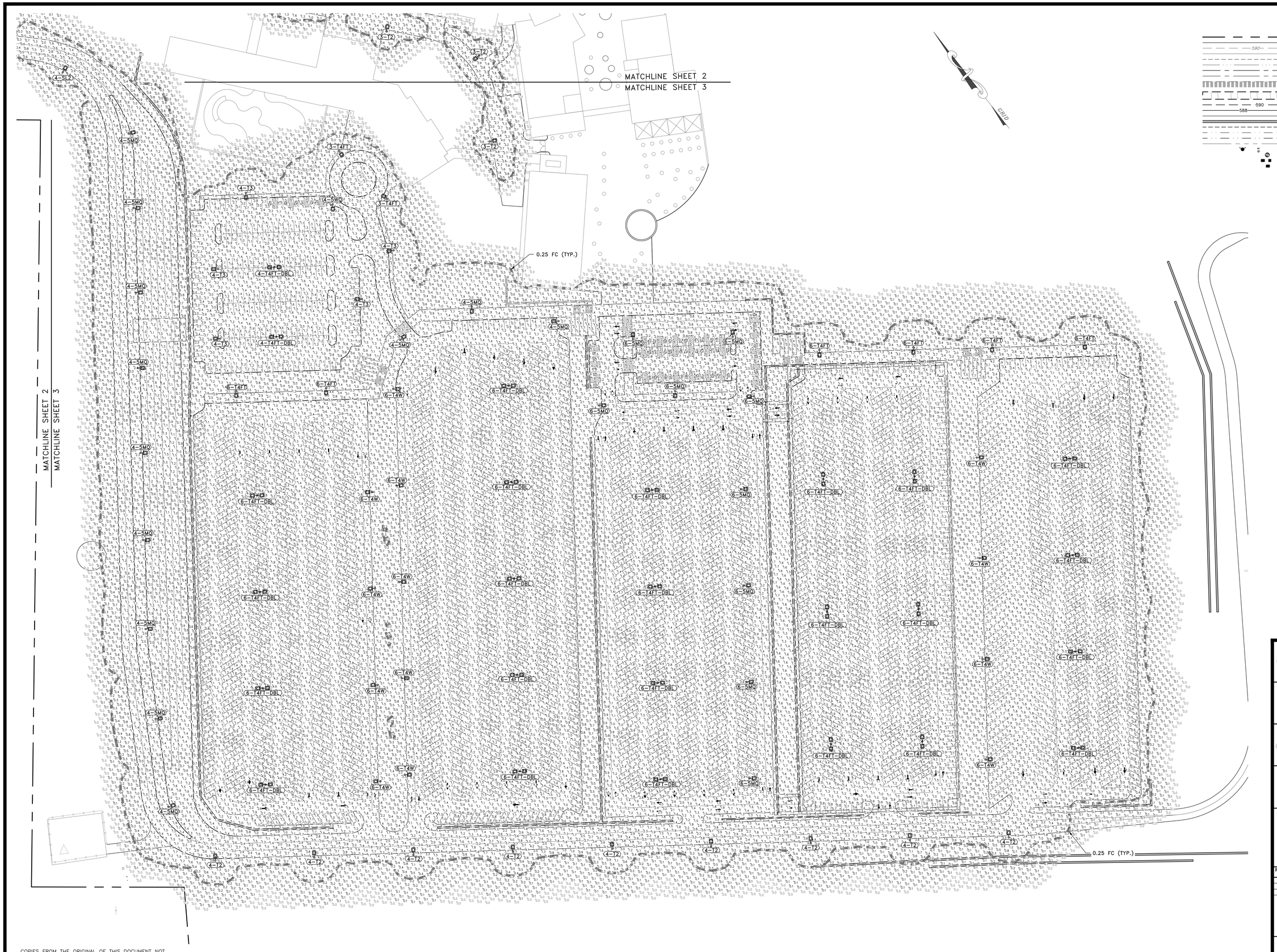

LEGEND

- PROPERTY LINE
- ADJOINING PARCEL LINES
- 590 — EXISTING MAJOR CONTOUR
- EXISTING MINOR CONTOUR
- EXISTING EASEMENT
- EXISTING WATERCOURSE
- EXISTING FEDERAL WETLAND BOUNDARY
- EXISTING NYS WETLAND BOUNDARY
- STREAM CORRIDOR AND RESERVOIR WATERSHED OVERLAY ZONING DISTRICT LIMIT
- FLOODPLAIN AND PONDING AREA OVERLAY
- 590 — PROPOSED MAJOR CONTOUR
- 588 — PROPOSED MINOR CONTOUR
- PROPOSED EDGE OF PAVEMENT
- PROPOSED RETAINING WALL
- PROPOSED DRAINAGE
- PROPOSED SWALE
- PROPOSED SANITARY SEWER
- PROPOSED WATER MAIN
- PROPOSED HYDRANT/VALVE
- PROPOSED DRAINAGE MANHOLE
- PROPOSED FLAT INLET CATCH BASINS
- PROPOSED CURB INLET CATCH BASIN

GRAPHIC SCALE

60 0 30 60 120 240

(IN FEET)
1 inch = 60 ft.

COPYRIGHT 2016, LANC & TULLY, P.C.

LANC & TULLY
ENGINEERING AND SURVEYING, P.C.
P.O. Box 687, Rt. 207
Goshen, N.Y. 10924
(845) 294-3700

MERLIN ENTERPRISES

FORREC

MASER CONSULTING P.A.

ROADWAY & PARKING AREA LIGHTING PLAN SHEET 3 OF 4

LEGOLAND NEW YORK

TOWN OF GOSHEN
ORANGE COUNTY, NEW YORK

Revisions:

No.	Description	Issue Date
1	PLAN DEVELOPMENT	SEPTEMBER 1, 2016
2	PLAN DEVELOPMENT	NOVEMBER 3, 2016
3	FEIS SITEPLAN	MAY 18, 2017

CAD File: 160042-Lighting	
Layout: LIGHT 3	
Drawn By: MK	Checked By: JOR
Scale: 1" = 60'	Project No.: 16-0042
Tax Map No.: SEE SHEET 2	
Date: JULY 21, 2016	
Sheet/Drawing No.: C 32 OF 40	

COPIES FROM THE ORIGINAL OF THIS DOCUMENT NOT MARKED WITH AN ORIGINAL OF THE PROFESSIONAL ENGINEER'S AND/OR LAND SURVEYOR'S STAMP OR EMBOSSED SEAL SHALL NOT BE CONSIDERED VALID, TRUE COPIES.

UNAUTHORIZED ALTERATION OR ADDITION TO THIS DOCUMENT IS A VIOLATION OF SECTION 7209-2 OF THE NEW YORK STATE EDUCATION LAW.

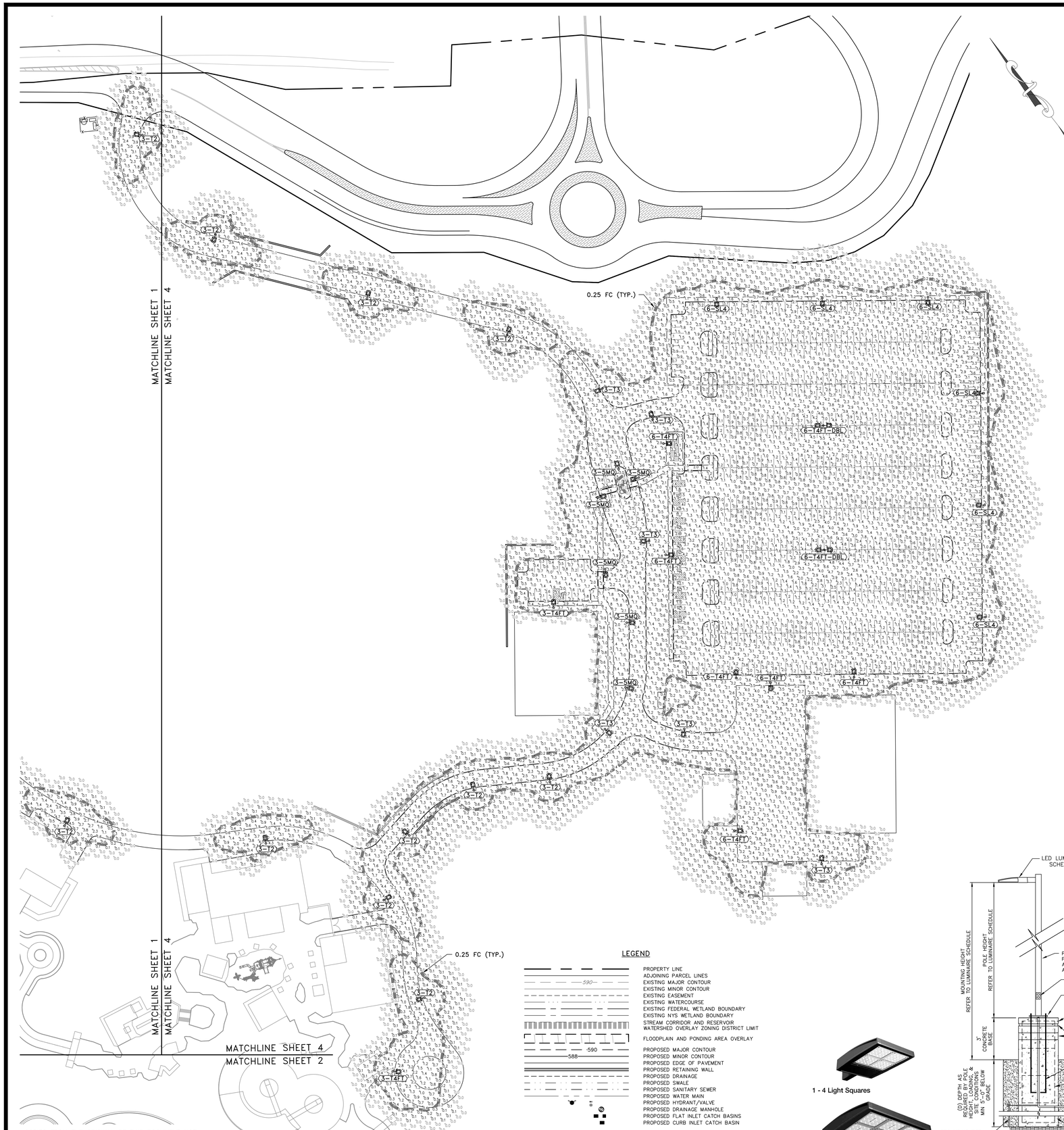

LUMINAIRE SCHEDULE

SYMBOL	QTY	POLE HEIGHT / MOUNTING HEIGHT	DESCRIPTION	CATALOG NUMBER	LAMP	LUMENS	LDF
(3-5MQ)	13	POLE=16' MOUNTING HT.=19'	EATON MCGRAW EDISON "GALLEON" L.E.D. AREA LUMINAIRE 3 LED LIGHT SQUARES @ 600 mA TYPE 5MQ DISTRIBUTION WITH "LUMAWATT" LIGHTING CONTROLS*	GLEON-AF-03-LED-XXX-5MQ-XX 600;LWR-LN;MT	LED ARRAY	12,578	.95
(3-T2)	24	POLE=16' MOUNTING HT.=19'	EATON MCGRAW EDISON "GALLEON" L.E.D. AREA LUMINAIRE 3 LED LIGHT SQUARES @ 600 mA TYPE T2 DISTRIBUTION WITH "LUMAWATT" LIGHTING CONTROLS*	GLEON-AF-03-LED-XXX-T2-XX 600;LWR-LN;MT	LED ARRAY	11,749	.95
(3-T3)	6	POLE=16' MOUNTING HT.=19'	EATON MCGRAW EDISON "GALLEON" L.E.D. AREA LUMINAIRE 3 LED LIGHT SQUARES @ 600 mA TYPE T3 DISTRIBUTION WITH "LUMAWATT" LIGHTING CONTROLS*	GLEON-AF-03-LED-XXX-T3-XX 600;LWR-LN;MT	LED ARRAY	11,976	.95
(3-T4FT)	4	POLE=16' MOUNTING HT.=19'	EATON MCGRAW EDISON "GALLEON" L.E.D. AREA LUMINAIRE 3 LED LIGHT SQUARES @ 600 mA TYPE 5MQ DISTRIBUTION WITH "LUMAWATT" LIGHTING CONTROLS*	GLEON-AF-03-LED-XXX-5MQ-XX 600;LWR-LN;MT	LED ARRAY	12,045	.95
(4-5MQ)	13	POLE=25' MOUNTING HT.=28'	EATON MCGRAW EDISON "GALLEON" L.E.D. AREA LUMINAIRE 4 LED LIGHT SQUARES @ 1 A TYPE 5MQ DISTRIBUTION WITH "LUMAWATT" LIGHTING CONTROLS*	GLEON-AF-04-LED-XXX-5MQ-XX LWR-LN;MT	LED ARRAY	25,224	.95
(4-5WQ)	1	POLE=25' MOUNTING HT.=28'	EATON MCGRAW EDISON "GALLEON" L.E.D. AREA LUMINAIRE 4 LED LIGHT SQUARES @ 1 A TYPE 5WQ DISTRIBUTION WITH "LUMAWATT" LIGHTING CONTROLS*	GLEON-AF-04-LED-XXX-5WQ-XX LWR-LN;MT	LED ARRAY	25,291	.95
(4-RW)	6	POLE=25' MOUNTING HT.=28'	EATON MCGRAW EDISON "GALLEON" L.E.D. AREA LUMINAIRE 4 LED LIGHT SQUARES @ 1 A TYPE RW DISTRIBUTION WITH "LUMAWATT" LIGHTING CONTROLS*	GLEON-AF-04-LED-XXX-RW-XX LWR-LN;MT	LED ARRAY	24,544	.95
(4-SL2)	7	POLE=25' MOUNTING HT.=28'	EATON MCGRAW EDISON "GALLEON" L.E.D. AREA LUMINAIRE 4 LED LIGHT SQUARES @ 1 A TYPE SL2 DISTRIBUTION WITH "LUMAWATT" LIGHTING CONTROLS*	GLEON-AF-04-LED-XXX-SL2-XX LWR-LN;MT	LED ARRAY	23,522	.95
(4-T2)	9	POLE=25' MOUNTING HT.=28'	EATON MCGRAW EDISON "GALLEON" L.E.D. AREA LUMINAIRE 4 LED LIGHT SQUARES @ 1 A TYPE T2 DISTRIBUTION WITH "LUMAWATT" LIGHTING CONTROLS*	GLEON-AF-04-LED-XXX-T2-XX LWR-LN;MT	LED ARRAY	23,563	.95
(4-T3)	5	POLE=25' MOUNTING HT.=28'	EATON MCGRAW EDISON "GALLEON" L.E.D. AREA LUMINAIRE 4 LED LIGHT SQUARES @ 1 A TYPE T3 DISTRIBUTION WITH "LUMAWATT" LIGHTING CONTROLS*	GLEON-AF-04-LED-XXX-T3-XX LWR-LN;MT	LED ARRAY	24,017	.95
(4-T4FT-DBL)	2	POLE=25' MOUNTING HT.=28'	(2) EATON MCGRAW EDISON "GALLEON" L.E.D. AREA LUMINAIRES 4 LED LIGHT SQUARES @ 1 A TYPE T4FT DISTRIBUTION WITH "LUMAWATT" LIGHTING CONTROLS*	(2) LUMINAIRES ON SINGLE POLE GLEON-AF-04-LED-XXX-5MQ-XX LWR-LN;MT	LED ARRAY	2X 24,156	.95
(6-5MQ)	9	POLE=30' MOUNTING HT.=33'	EATON MCGRAW EDISON "GALLEON" L.E.D. AREA LUMINAIRE 6 LED LIGHT SQUARES @ 1 A TYPE 5MQ DISTRIBUTION WITH "LUMAWATT" LIGHTING CONTROLS*	GLEON-AF-06-LED-XXX-5MQ-XX LWR-LN;MT	LED ARRAY	37,400	.95
(6-SL4)	6	POLE=30' MOUNTING HT.=33'	EATON MCGRAW EDISON "GALLEON" L.E.D. AREA LUMINAIRE 6 LED LIGHT SQUARES @ 1 A TYPE SL4 DISTRIBUTION WITH "LUMAWATT" LIGHTING CONTROLS*	GLEON-AF-06-LED-XXX-SL4-XX LWR-LN;MT	LED ARRAY	33,829	.95
(6-T4FT)	12	POLE=30' MOUNTING HT.=33'	EATON MCGRAW EDISON "GALLEON" L.E.D. AREA LUMINAIRE 6 LED LIGHT SQUARES @ 1 A TYPE T4FT DISTRIBUTION WITH "LUMAWATT" LIGHTING CONTROLS*	GLEON-AF-06-LED-XXX-T4FT-XX LWR-LN;MT	LED ARRAY	35,815	.95
(6-T4FT-DBL)	25	POLE=30' MOUNTING HT.=33'	(2) EATON MCGRAW EDISON "GALLEON" L.E.D. AREA LUMINAIRES 6 LED LIGHT SQUARES @ 1 A TYPE T4FT DISTRIBUTION WITH "LUMAWATT" LIGHTING CONTROLS*	(2) LUMINAIRES ON SINGLE POLE GLEON-AF-06-LED-XXX-T4FT-XX LWR-LN;MT	LED ARRAY	2X 35,815	.95
(6-T4W)	13	POLE=30' MOUNTING HT.=33'	EATON MCGRAW EDISON "GALLEON" L.E.D. AREA LUMINAIRE 6 LED LIGHT SQUARES @ 1 A TYPE T4W DISTRIBUTION WITH "LUMAWATT" LIGHTING CONTROLS*	GLEON-AF-06-LED-XXX-T4W-XX LWR-LN;MT	LED ARRAY	35,352	.95

LIGHTING NOTES:

1. SHOP DRAWING SUBMITTALS SHALL BE REQUIRED FOR SIGN-OFF BY THE DESIGN ENGINEER FOR LIGHTING MATERIALS (LUMINAIRES, POLES, CONCRETE BASES, ETC...) PRIOR TO ORDERING ANY MATERIALS.
2. ANY PROPOSED DEVIATIONS OR ALTERNATES FROM THE PROPOSED SPECIFIED LUMINAIRES AND LAYOUT SHOWN HEREON SHALL REQUIRE EVALUATION AND ANALYSIS BY THE DESIGN ENGINEER TO VERIFY MATCHING OR IMPROVED PERFORMANCE COMPARED TO THE SPECIFIED PRODUCTS. ALTERNATE LUMINAIRES WILL BE REQUIRED TO MEET THE SAME CONTROL, DIMMING, OCCUPANCY SENSING, AND SCHEDULING FUNCTIONALITY AS THE SPECIFIED PRODUCTS. ANY COSTS ASSOCIATED WITH ANALYSIS AND REVIEW OF PROPOSED ALTERNATES SHALL BE PAID FOR BY THE CONTRACTOR REGARDLESS OF THE FINAL DECISION BY THE DESIGN ENGINEER.
3. REFER TO LUMINAIRE SCHEDULE FOR CATALOG NUMBER AND MOUNTING HEIGHTS.
4. LIGHT POLES SHALL BE:
   FOR 19' MOUNTING HEIGHT: HAPCO SSA16D4-4-** MOUNTED ON 2' ø X 36" HIGH CONCRETE BASE
   FOR 28' MOUNTING HEIGHT: HAPCO SSA25F6-4-** MOUNTED ON 2' ø X 36" HIGH CONCRETE BASE
   FOR 33' MOUNTING HEIGHT: HAPCO SSS30D6-4-** MOUNTED ON 3' ø X 36" HIGH CONCRETE BASE
   OR APPROVED EQUIVALENTS
5. FINISH OF ALL LUMINAIRES AND POLES SHALL BE SELECTED BY OWNER.
6. CONCRETE POLE BASES SHALL BE 36" HIGH DECORATIVE STYLE CONSTRUCTED USING PRE-MOLDED FORMS BY "ARTFORMS" WITH COLOR ACCENT BANDS. 2' DIAMETER BASES SHALL BE MODEL "KELLAMY 610R". 3' DIAMETER BASES SHALL BE MODEL "KELLAMY FL". COLOR ACCENT BANDS SHALL BE SELECTED AND COORDINATED WITH THE OWNER PRIOR TO ORDERING AND INSTALLATION.
7. CONTRACTOR SHALL CONFIRM OPERATING VOLTAGE FOR SITE LIGHTING PRIOR TO ORDERING ANY EQUIPMENT AND ADJUST LUMINAIRE SPECIFICATION AS NEEDED.
8. THIS LIGHTING PLAN PROPOSES INSTALLATION OF EATON "LUMAWATT" WIRELESS CONTROL AND MONITORING SYSTEM. SENSORS ARE INSTALLED ON EACH INDIVIDUAL LUMINAIRE TO PROVIDE WIRELESS REMOTE CONTROL, SCHEDULING, MONITORING, DIMMING, DAYLIGHT SENSING, AND OCCUPANCY SENSING. THE "LUMAWATT" SYSTEM REQUIRES INSTALLATION OF AN "ENERGY MANAGEMENT SERVER", WIRELESS GATEWAY, AND CONNECTION TO THE FACILITY COMPUTER NETWORK SYSTEM INTERNAL OF A BUILDING. INSTALLATION CONTRACTOR SHALL COORDINATE WITH THE SYSTEM MANUFACTURER, OWNERS REPRESENTATIVE, BUILDING ELECTRICIAN(S), AND ANY OTHER RELATED PARTIES FOR INSTALLATION.
9. SITE LIGHTING SCHEDULE WILL BE ADJUSTED SEASONALLY TO COORDINATE WITH FACILITY OPERATIONS. DURING NORMAL FULL SERVICE OPERATIONS ILLUMINATION SHALL BE SCHEDULED SIMILAR TO THE FOLLOWING (OR AS DIRECTED AND ADJUSTED BY THE FACILITY OPERATOR AS NEEDED):
   9.1. GUEST AREAS:
   9.1.1. GUEST AREA ROADWAY AND PARKING LUMINAIRES WILL ILLUMINATE AT DUSK TO 100% POWER UNTIL AT LEAST ONE HOUR AFTER FACILITY CLOSING. LUMINAIRES SHALL THEN BE DIMMED TO 50% POWER WITH OCCUPANCY SENSORS PROVIDING LOCALIZED FULL POWER ILLUMINATION.
   9.1.2. DURING THE OVERNIGHT HOURS:
   9.1.2.1. LIGHTING WITHIN THE GUEST ENTRANCE ROAD, ACCESS TO THE HOTEL, AND HOTEL GUEST PARKING AREA SHALL REMAIN AT 50% POWER WITH OCCUPANCY SENSORS TO PROVIDE FOR HOTEL GUEST COMFORT AND SECURITY.
   9.1.2.2. LIGHTING WITHIN THE GUEST PARKING LOTS SHALL BE TURNED OFF WITH LOCALIZED OCCUPANCY SENSING TURNING INDIVIDUAL LUMINAIRES ON AS-NEEDED.
   9.2. SERVICE AREAS (BACK OF HOUSE):
   9.2.1. THE EMPLOYEE ENTRANCE ROAD, PARK SERVICE ROAD, AND EMPLOYEE PARKING AREAS WILL ILLUMINATE TO 100% POWER UNTIL A TIME TO BE DETERMINED BY THE OWNER WHEN THE MAJORITY OF EMPLOYEES ARE NO LONGER ON THE PREMISES. AFTER THE INITIAL FULL ILLUMINATION PERIOD, THE LUMINAIRES SHALL BE REDUCED TO 50% POWER WITH OCCUPANCY SENSORS PROVIDING LOCALIZED FULL POWER ILLUMINATION.
   9.2.2. DURING THE OVERNIGHT HOURS:
   9.2.2.1. LIGHTING WITHIN THE EMPLOYEE ENTRANCE ROAD SHALL REMAIN ON AT 50% POWER WITH OCCUPANCY SENSORS PROVIDING 100% ILLUMINATION.
   9.2.2.2. LIGHTING WITHIN THE PARK SERVICE ROAD (RING ROAD) AND EMPLOYEE PARKING AREA WILL BE TURNED OFF WITH LOCALIZED OCCUPANCY SENSING TURNING INDIVIDUAL LUMINAIRES ON AT 100% POWER AS NEEDED.
   9.3. BUILDING LUMINAIRES MOUNTED OVER EMERGENCY EXIT DOORS SHALL OPERATE AT 100% POWER AT ALL TIMES.
   9.4. DURING OFF-SEASON OPERATIONS OF THE SITE, THE FACILITY OPERATOR MAY WISH TO REMOVE CERTAIN PORTIONS OF THE SITE LIGHTING FROM OPERATION AS APPROPRIATE FOR REDUCED FACILITY USAGE.
   9.5. THE ABOVE SCHEDULE IS PREPARED AS A PRELIMINARY SUGGESTION OF SITE LIGHTING OPERATIONS AND SHALL NOT RESTRICT THE FACILITY OPERATOR FROM MAKING ADJUSTMENTS AS NEEDED AT THEIR DISCRETION IN CONSIDERATION OF GUEST COMFORT AND SAFETY, SITE SECURITY, AND ENERGY SAVINGS GOALS.
10. LIGHT POLES SPECIFIED HAVE BEEN SELECTED BASED UPON WIND LOADING ASSOCIATED WITH THE SPECIFIED LUMINAIRES. NO ADDITIONAL EQUIPMENT OR ATTACHMENTS SHALL BE PERMITTED ON LIGHT POLES WITHOUT APPROVAL OF DESIGN ENGINEER. EQUIPMENT INCLUDES BUT IS NOT LIMITED TO BANNERS, FLAGS, SIGNS, ADDITIONAL LUMINAIRES OTHER THAN SPECIFIED ON THIS PLAN, SECURITY CAMERAS, WEATHER SENSORS, ETC...
11. THIS LIGHTING PLAN DOES NOT TAKE INTO ACCOUNT ANY ARCHITECTURAL BUILDING MOUNTED LUMINAIRES OR LUMINAIRES SPECIFIED WITHIN THE PARK FACILITY UNLESS SPECIFICALLY IDENTIFIED ON THIS PLAN.
12. CALCULATION VALUES SHOWN ON THIS PLAN ARE TAKEN ON A HORIZONTAL PLAIN AT GROUND LEVEL USING A 95% LAMP LUMEN DEPRECIATION FACTOR. TOPOGRAPHICAL INFORMATION HAS NOT BEEN ACCOUNTED FOR IN THESE CALCULATIONS.
13. LIGHTING CALCULATIONS SHOWN ARE BASED UPON DATA FILES PROVIDED BY THE LUMINAIRE MANUFACTURER. ACTUAL PERFORMANCE OF LUMINARIES AFTER INSTALLATION MAY VARY DUE TO UNCONTROLLABLE FIELD CONDITIONS.

LEGEND

- PROPERTY LINE
- ADJOINING PARCEL LINES
- 590 — EXISTING MAJOR CONTOUR
- EXISTING MINOR CONTOUR
- EXISTING EASEMENT
- EXISTING WATERCOURSE
- EXISTING FEDERAL WETLAND BOUNDARY
- EXISTING NYS WETLAND BOUNDARY
- STREAM CORRIDOR AND RESERVOIR WATERSHED OVERLAY ZONING DISTRICT LIMIT
- FLOODPLAIN AND PONDING AREA OVERLAY
- 590 — PROPOSED MAJOR CONTOUR
- 588 — PROPOSED MINOR CONTOUR
- PROPOSED EDGE OF PAVEMENT
- PROPOSED RETAINING WALL
- PROPOSED DRAINAGE
- PROPOSED SWALE
- PROPOSED SANITARY SEWER
- PROPOSED WATER MAIN
- PROPOSED HYDRANT/VALVE
- PROPOSED DRAINAGE MANHOLE
- PROPOSED FLAT INLET CATCH BASINS
- PROPOSED CURB INLET CATCH BASIN

1 - 4 Light Squares

5 - 6 Light Squares

EATON MCGRAW EDISON "GALLEON" LED AREA LUMINAIRE
POLE MOUNT AREA LUMINAIRE

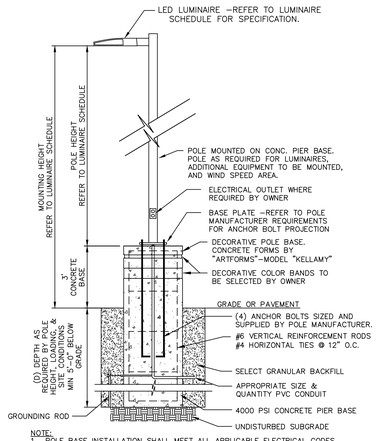

NOTE:
1. POLE BASE INSTALLATION SHALL MEET ALL APPLICABLE ELECTRICAL CODES AND POLE MANUFACTURER RECOMMENDATIONS.
2. DECORATIVE CONCRETE BASE FORMS SUPPLIED BY:
   ArtFORMS INTERNATIONAL INC.
   TEL. 905-642-3225
   WWW.ARTFORMSCONCRETEBASES.COM

LIGHT POLE BASE DETAIL
NOT TO SCALE

GRAPHIC SCALE
60 0 30 60 120 240
(IN FEET)
1 inch = 60 ft.

COPYRIGHT 2016, LANC & TULLY, P.C.

LANC & TULLY
ENGINEERING AND SURVEYING, P.C.
P.O. Box 687, Rt. 207
Goshen, N.Y. 10924
(845) 294-3700

MERLIN ENTERTAINMENTS
FORREC
MASER CONSULTING P.A.

ROADWAY & PARKING AREA LIGHTING PLAN
SHEET 4 OF 4

LEGOLAND NEW YORK
TOWN OF GOSHEN
ORANGE COUNTY, NEW YORK

Revisions:

No.	Description	Issue Date
1	PLAN DEVELOPMENT	SEPTEMBER 1, 2016
2	PLAN DEVELOPMENT	NOVEMBER 3, 2016
3	FEIS SITEPLAN	MAY 18, 2017

CAD File:	160042-Lighting
Layout:	LIGHT 4
Drawn By: MK	Checked By: JOR
Scale: 1" = 60'	Project No.: 16-0042
Tax Map No.:	SEE SHEET 2
Date:	JULY 21, 2016
Sheet/Drawing No.:	C 33 OF 40

COPIES FROM THE ORIGINAL OF THIS DOCUMENT NOT MARKED WITH AN ORIGINAL OF THE PROFESSIONAL ENGINEER'S AND/OR LAND SURVEYOR'S STAMP OR EMBOSSED SEAL SHALL NOT BE CONSIDERED VALID, TRUE COPIES.

UNAUTHORIZED ALTERATION OR ADDITION TO THIS DOCUMENT IS A VIOLATION OF SECTION 7209-2 OF THE NEW YORK STATE EDUCATION LAW.

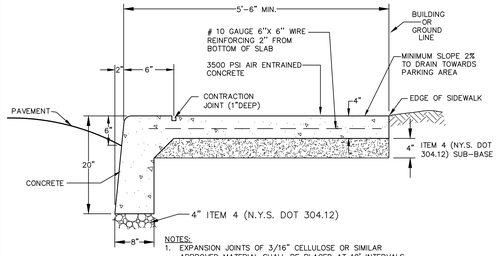

NOTES:
1. EXPANSION JOINTS OF 3/16" CELLULOSE OR SIMILAR APPROVED MATERIAL SHALL BE PLACED AT 10' INTERVALS
2. CONTRACTION JOINTS 1" DEEP HAVING 1/4" RADIUS EDGES SHALL BE PLACED AT 5'-0" INTERVALS IN SIDEWALK.
3. EDGES SHALL HAVE 1/2" RADIUS.
4. USE 3500 PSI AIR ENTRAINED CONCRETE.
5. BROOM FINISH TOP SURFACE.

MONOLITHIC CURB AND SIDEWALK DETAIL
NOT TO SCALE

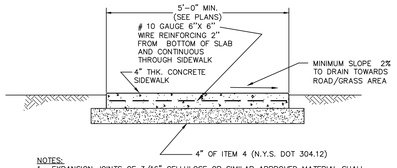

NOTES:
1. EXPANSION JOINTS OF 3/16" CELLULOSE OR SIMILAR APPROVED MATERIAL SHALL BE PLACED AT 10' INTERVALS
2. CONTRACTION JOINTS 1" DEEP HAVING 1/4" RADIUS EDGES SHALL BE PLACED AT 5'-0" INTERVALS IN SIDEWALK.
3. EDGES SHALL HAVE 1/2" RADIUS.
4. USE 3500 PSI AIR ENTRAINED CONCRETE.
5. BROOM FINISH TOP SURFACE.

STANDARD SIDEWALK DETAIL
NOT TO SCALE

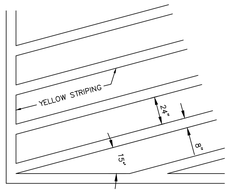

HATCH LINES
261.13(b)

NOTE: DETAIL SHALL BE USED FOR ALL ON-SITE LOCATIONS WHERE PAVEMENT HATCHING IS SPECIFIED

STRIPING DETAIL
NOT TO SCALE

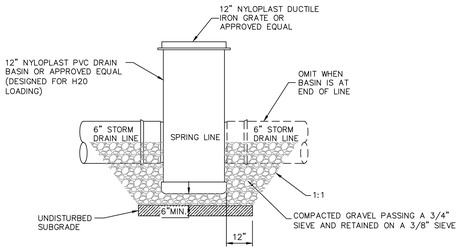

PROFILE
YARD DRAIN

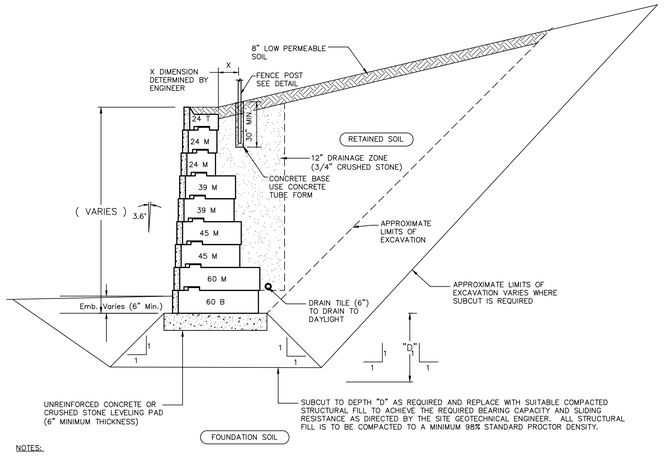

NOTES:

TYPICAL CROSS SECTION FOR GRAVITY RETAINING WALL AS MANUFACTURED BY RECON RETAINING WALL SYSTEMS, MINNEAPOLIS, MN, OR APPROVED ALTERNATE.

1. CONTRACTOR SHALL PROVIDE SITE SPECIFIC WALL DESIGN PLANS PREPARED BY A PROFESSIONAL ENGINEER LICENSED TO PRACTICE IN NEW YORK STATE FOR ALL RETAINING WALLS FOR REVIEW AND APPROVAL BY THE LOCAL BUILDING DEPARTMENT PRIOR TO WALL CONSTRUCTION.
2. THE DESIGN SHALL BE PER NCMA DESIGN GUIDELINES FOR SEGMENTAL RETAINING WALLS, OR THE AASHTO STANDARD SPECIFICATIONS FOR HIGHWAY BRIDGES, WHICHEVER IS APPLICABLE AS DETERMINED BY THE RETAINING WALL DESIGN ENGINEER.
3. CONSTRUCTION DRAWINGS SHALL INCLUDE:
   a. THE RETAINING WALL LAYOUT AND RETAINING WALL HEIGHTS.
   b. PROPER PLACEMENT, LENGTHS AND TYPES OF GEOGRID REINFORCEMENT WHERE NECESSARY.
   c. TYPICAL WALL SECTIONS.
   d. TYPES, LOCATIONS AND PROPERTIES OF ALL DRAINAGE MATERIALS, APPURTENANCES AND SPECIAL INSTALLATION REQUIREMENTS NOT COVERED IN THIS SPECIFICATION.
   e. RETAINING WALL ELEVATION VIEWS.
   f. ANY SOILS REPORTS OR TESTING CONDUCTED IN ADDITION TO THAT INCLUDED WITHIN THE PROJECT DRAWINGS AND SPECIFICATIONS.
   g. DESIGN ASSUMPTIONS.

TYPICAL GRAVITY WALL CROSS SECTION
NOT TO SCALE

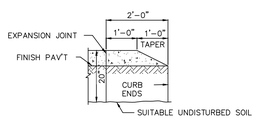

BULLNOSE CURB TERMINAL
NOT TO SCALE

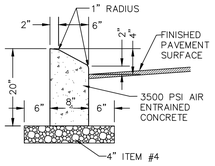

CONTRACTOR TO PROVIDE 1/2" PREFORMED BITUMINOUS – IMPREGNATED FIBER JOINT FILLER EVERY 10'. JOINT FILLER TO COMPLY WITH A.A.S.H.T.O. SPEC. M-213. FILLER TO BE RECESSED IN FROM FRONT FACE AND TOP OF CURB 1/4".

CONCRETE CURB DETAIL (MOUNTABLE)
NOT TO SCALE

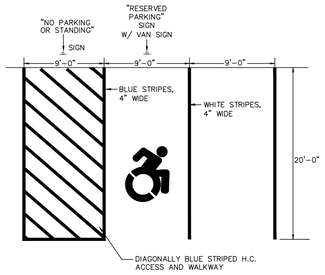

HANDICAP AND TYPICAL PARKING SPACE STRIPING DETAIL
NOT TO SCALE

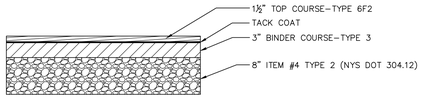

PAVEMENT SECTION 1
PASSENGER CAR PARKING AREAS
NOT TO SCALE

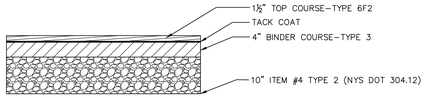

PAVEMENT SECTION 2
MEDIUM DUTY ENTRANCE ROAD & TRUCK TRAFFIC AREAS
NOT TO SCALE

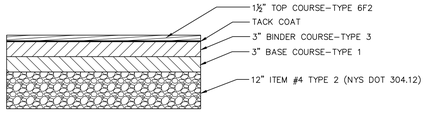

PAVEMENT SECTION 3
HEAVY DUTY TRUCK TRAFFIC AREAS
NOT TO SCALE

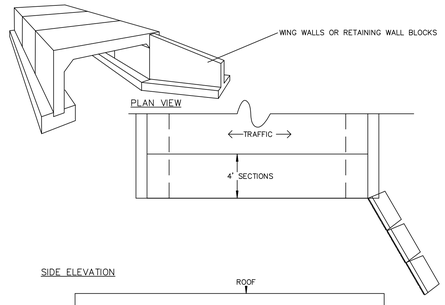

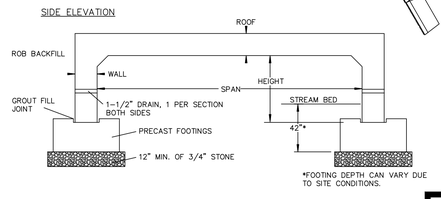

SPECIFICATIONS
1. CONCRETE MIN. STRENGTH: 5,000 PSI AT 28 DAYS
2. REINFORCEMENT: #3 TO #6 BAR / ASTM A615
3. AIR ENTRAINMENT: 5%
4. LIFTING: (4) 4 TON ANCHORS
5. LOAD RATING: H25 + 30% IMPACT
6. MANUFACTURED BY WOODARD'S CONCRETE PRODUCTS, INC.

OPEN BOTTOM CONCRETE BOX CULVERT TYPICAL DETAIL
NOT TO SCALE

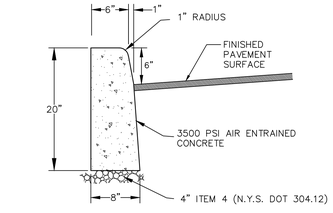

CONTRACTOR TO PROVIDE 1/2" PREFORMED BITUMINOUS – IMPREGNATED FIBER JOINT FILLER EVERY 10'. JOINT FILLER TO COMPLY WITH A.A.S.H.O. SPEC. M-213. FILLER TO BE RECESSED IN FROM FRONT FACE AND TOP OF CURB 1/4".

CONCRETE CURB
NOT TO SCALE

GENERAL SIDEWALK NOTES:

1. THE PUBLIC SIDEWALK CURB RAMP STANDARDS DEPICTED HERE MAY NOT BE APPROPRIATE FOR ALL LOCATIONS. FIELD CONDITIONS AT INDIVIDUAL LOCATIONS MAY REQUIRE SPECIFIC DESIGNS. DESIGNS MUST BE CONSISTENT WITH THE PROVISIONS OF THIS SHEET TO THE MAXIMUM EXTENT FEASIBLE ON ALTERATION PROJECTS AND WHEN STRUCTURALLY PRACTICABLE ON NEW CONSTRUCTION PROJECTS AS REQUIRED BY THE AMERICAN'S WITH DISABILITIES ACT ACCESSIBILITY GUIDELINES.
2. THERE SHALL BE A LANDING AT THE TOP OF EACH CURB RAMP. THERE SHALL BE A LANDING AT THE TOP AND AT THE BOTTOM OF EACH PARALLEL AND PARALLEL/PERPENDICULAR RAMP.
3. LANDINGS SHALL HAVE A MINIMUM CLEAR DIMENSION OF A 60" BY 60" SQUARE. THE MAXIMUM CROSS SLOPE AT LANDINGS IS 2 PERCENT IN ANY DIRECTION. LANDINGS MAY OVERLAP WITH ADJACENT LANDINGS OR A SINGLE LANDING LANDINGS MAY OVERLAP WITH THE CLEAR GROUND SPACE REQUIRED AT PEDESTRIAN SIGNAL PUSH BUTTONS.
4. CROSS SLOPES. THE MAXIMUM CROSS SLOPE OF CURB RAMPS SHALL BE 2 PERCENT. CURB RAMP SURFACES SHALL GENERALLY LIE IN CONTINUOUS PLANES WITH A MINIMUM OF SURFACE WARP.
5. THE RUNNING GRADE OF CURB RAMPS SHOULD BE AS FLAT AS PRACTICABLE THE MAXIMUM RUNNING GRADE OF ANY PORTION OF ANY CURB RAMP SHALL BE 1:12 (8.3%). CURB RAMPS ARE NOT REQUIRED TO BE LONGER THAN 15'.
6. THE SURFACE OF ALL CURB RAMPS SHALL BE STABLE, FIRM AND SLIP RESISTANT. A COARSE BROOM FINISH RUNNING PERPENDICULAR TO THE SLOPE IS RECOMMENDED ON CONCRETE RAMP SURFACES, EXCLUSIVE OF THE DETECTABLE WARNING FIELDS.
7. RAMP TRANSITIONS BETWEEN WALKS, GUTTERS, OR STREETS SHALL BE FLUSH AND FREE OF ABRUPT VERTICAL CHANGES (1/4" MAX.).
8. COORDINATE ALL TRAFFIC CONTROL DEVICES, UTILITY LOCATIONS, SIGNS, STREET FURNITURE AND DRAINAGE TO ENSURE A CONTINUOUS PEDESTRIAN ACCESS ROUTE AT ALL CURB RAMP LOCATIONS. GUIDANCE FOR CROSSWALK MARKINGS AND TRAFFIC CONTROL DEVICES IS PROVIDED IN THE MUTCD. DRAINAGE GRATES AND UTILITY ACCESS COVERS ARE NOT ALLOWED IN RAMP WALKING SURFACES OR LANDINGS.
9. AT MARKED CROSSINGS, THE FULL WIDTH OF THE RAMP SHALL BE WHOLLY CONTAINED WITHIN THE MARKINGS. FLARES AT THE SIDES OF THE RAMPS NEED NOT BE WITHIN THE WIDTH OF THE MARKINGS.
10. DETAILS ILLUSTRATE DETECTABLE WARNINGS. DETECTABLE WARNINGS ARE ONLY REQUIRED ON PUBLIC STREETS.
11. SLOPES ON BLENDED TRANSITIONS SHALL NOT BE STEEPER THAN 2% (1 ON 50) IN ANY DIRECTION.

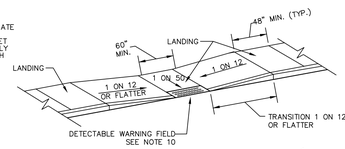

PARALLEL CURB RAMPS (TYPE A)
NOT TO SCALE

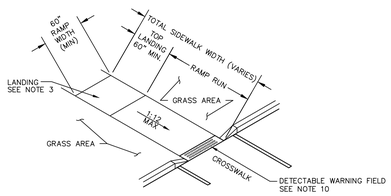

PERPENDICULAR SIDEWALK CURB RAMP (TYPE B)
NOT TO SCALE

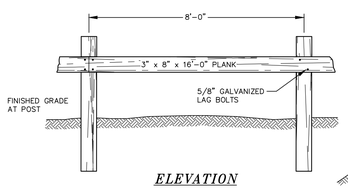

ELEVATION

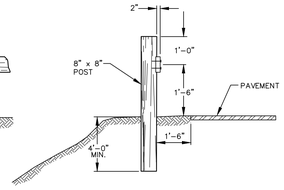

SECTION

NOTE:
ALL WOOD TO BE PRESSURE TREATED

WOOD GUIDE RAIL
NOT TO SCALE

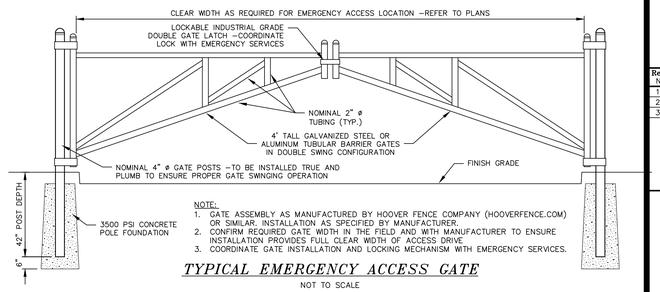

NOTE:
1. GATE ASSEMBLY AS MANUFACTURED BY HOOVER FENCE COMPANY (HOOVERFENCE.COM) OR SIMILAR. INSTALLATION AS SPECIFIED BY MANUFACTURER.
2. CONFIRM REQUIRED GATE WIDTH IN THE FIELD AND WITH MANUFACTURER TO ENSURE INSTALLATION PROVIDES FULL CLEAR WIDTH OF ACCESS DRIVE
3. COORDINATE GATE INSTALLATION AND LOCKING MECHANISM WITH EMERGENCY SERVICES.

TYPICAL EMERGENCY ACCESS GATE
NOT TO SCALE

COPYRIGHT 2016, LANC & TULLY, P.C.

LANC & TULLY
ENGINEERING AND SURVEYING, P.C.
P.O. Box 687, RL 207
Goshen, N.Y. 10924
(845) 294-3700

MERLIN ENTERTAINMENTS
FORREC
MASER CONSULTING P.A.

CONSTRUCTION DETAILS 1

LEGOLAND NEW YORK
TOWN OF GOSHEN
ORANGE COUNTY, NEW YORK

Revisions:

No.	Description	Issue Date
1	PLAN DEVELOPMENT	SEPTEMBER 1, 2016
2	PLAN DEVELOPMENT	NOVEMBER 3, 2016
3	FEIS SITEPLAN	MAY 18, 2017

CAD File:	160042-CONST DETAILS
Layout:	CONST DTLS 1
Drawn By: MK	Checked By: JOR
Scale: N/A	Project No.: 16-0042
Tax Map No.:	SEE SHEET 2
Date:	JULY 21, 2016
Sheet/Drawing No.:	C 34 OF 40

COPIES FROM THE ORIGINAL OF THIS DOCUMENT NOT MARKED WITH AN ORIGINAL OF THE PROFESSIONAL ENGINEER'S AND/OR LAND SURVEYOR'S STAMP OR EMBOSSED SEAL SHALL NOT BE CONSIDERED VALID, TRUE COPIES.

UNAUTHORIZED ALTERATION OR ADDITION TO THIS DOCUMENT IS A VIOLATION OF SECTION 7209-2 OF THE NEW YORK STATE EDUCATION LAW.

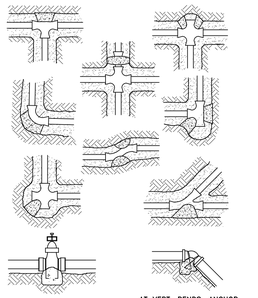

NOTES:

1. KEEP NUTS AND BOLTS FREE OF CONCRETE THROUGH THE USE OF PLASTIC COVERS.
2. THRUST BLOCKS ARE TO BE INSTALLED AS SHOWN FOR EACH OF THE FITTINGS SHOWN ABOVE WHERE INDICATED ON THE PLANS OR AS ORDERED BY THE ENGINEER.

THRUST BLOCK SIZING TABLE

BEARING AREA OF THRUST BLOCK IN SQUARE FEET

FITTING	THRUST * (POUNDS)	HARD SHALE	SAND & GRAVEL	SAND	SOFT CLAY
TEES AND DEAD ENDS					
6"	5,700	1	2	3	6
8"	9,870	1	3.5	5	10
10"	16,125	2	5.5	8.5	16.5
12"	22,965	2.5	8	11.5	23
14"	31,155	3.5	10.5	16.0	31.5
16"	40,320	4.5	13.5	20.5	40.5
90° BEND					
6"	8,055	1	3	4	8
8"	13,950	1.5	5	9	14
10"	22,800	2.5	8	11.5	23
12"	32,460	3.5	11	16.5	32.5
14"	44,040	4.5	15.0	22.5	44.5
16"	57,015	6	19.5	29	57.5
45° BEND					
6"	4,365	1	1.5	2.5	4.5
8"	7,560	1	2.5	4	8
10"	12,360	1.5	4.5	6.5	12.5
12"	17,580	2	6	9	18
14"	23,865	2.5	8.0	12.0	24
16"	30,885	3.5	10.5	15.5	31
22 1/2° BEND					
6"	2,205	1	1	1.5	2.5
8"	3,825	1	1.5	2	4
10"	6,255	1	2	3.5	6.5
12"	8,910	1	3	4.5	9
14"	12,090	1.5	4.5	6.5	12.5
16"	15,645	2	5.5	8	16

* THRUST AT 150 PSI OF WATER PRESSURE

THRUST BLOCK DETAILS

NOT TO SCALE

NOTE: LENGTH OF RESTRAINED JOINTS BASED UPON,
a) 4.5' MINIMUM COVER
b) TEST PRESSURE = 150 PSI
c) TYPE 5 TRENCH
d) 1.5 TO 1 SAFETY FACTOR

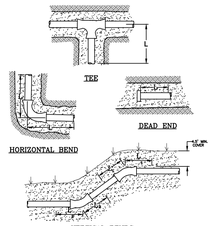

RESTRAINED JOINT TABLE

MINIMUM LENGTH REQUIRED IN LINEAR FEET

FITTING	LENGTH IN LINEAR FEET (L)
TEES AND DEAD ENDS	
6"	22
8"	29
10"	34
12"	40
14"	46
16"	52
90° BEND	
6"	10
8"	12
10"	15
12"	17
14"	20
16"	22
45° BEND	
6"	4
8"	5
10"	6
12"	7
14"	8
16"	9
22 1/2° BEND	
6"	2
8"	3
10"	3
12"	4
14"	4
16"	5
VERTICAL BENDS	L_4 / L_1
6"	9 / 4
8"	12 / 5
10"	14 / 6
12"	17 / 7
14"	19 / 8
16"	22 / 9

ALL REQUIRED JOINT RESTRAINT SHALL BE MEGALUG RETAINING GLANDS AS MANUFACTURED BY EBAA IRON, OR APPROVED EQUAL.

RESTRAINED JOINT DETAILS

NOT TO SCALE

ANCHORAGE OF VALVES

WORKING PRESSURE (PSI)	SIZE OF VALVE REQUIRING ANCHORAGE
50–100 101–150 151–200	12 INCH & UP 8 INCH & UP ALL SIZES

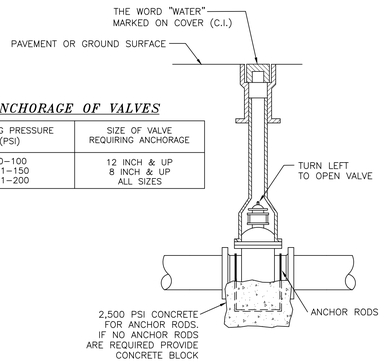

VALVE DETAIL

NOT TO SCALE

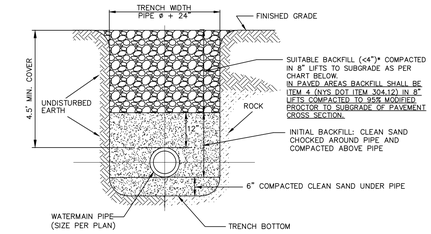

EARTH OR ROCK EXCAVATION

ACCEPTABLE BACKFILL MATERIAL & COMPACTION REQUIREMENTS				
	SOIL CLASSIFICATION			
DESCRIPTION	ASTM D2321	ASTM D2487	AASHTO M43	MINIMUM STANDARD PROCTOR DENSITY %
GRADED OR CRUSHED, STONE, GRAVEL	CLASS I	–	5 56	DUMPED
SAND, GRAVELS AND GRAVEL/SAND MIXTURES; LITTLE OR NO FINES	CLASS II	GW GP SW SP	57 6	85%
SILTY OR CLAYEY GRAVELS, GRAVEL/SAND/SILT OR GRAVEL AND CLAY MIXTURES; SILTY OR CLAYEY SANDS, SAND/CLAY OR SAND/SILT MIXTURES	CLASS III	GM GC SM SC	GRAVEL AND SAND (<10% FINES)	90%

NOTE: INORGANIC SILTS, CLAYS, AND OTHER CLASS IV MATERIAL SHALL NOT PERMITTED.

WATERMAIN TRENCH CROSS SECTION

NOT TO SCALE

*BACKFILL SHALL CONTAIN NO STONES OVER 4" IN ANY DIMENSION.

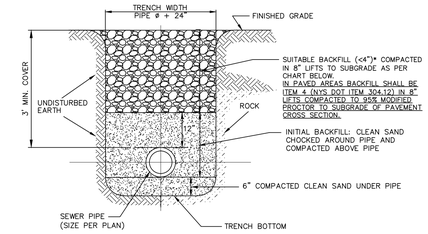

EARTH OR ROCK EXCAVATION

ACCEPTABLE BACKFILL MATERIAL & COMPACTION REQUIREMENTS				
	SOIL CLASSIFICATION			
DESCRIPTION	ASTM D2321	ASTM D2487	AASHTO M43	MINIMUM STANDARD PROCTOR DENSITY %
GRADED OR CRUSHED, STONE, GRAVEL	CLASS I	–	5 56	DUMPED
SAND, GRAVELS AND GRAVEL/SAND MIXTURES; LITTLE OR NO FINES	CLASS II	GW GP SW SP	57 6	85%
SILTY OR CLAYEY GRAVELS, GRAVEL/SAND/SILT OR GRAVEL AND CLAY MIXTURES; SILTY OR CLAYEY SANDS, SAND/CLAY OR SAND/SILT MIXTURES	CLASS III	GM GC SM SC	GRAVEL AND SAND (<10% FINES)	90%

NOTE: INORGANIC SILTS, CLAYS, AND OTHER CLASS IV MATERIAL SHALL NOT PERMITTED.

SANITARY SEWER TRENCH CROSS SECTION

NOT TO SCALE

*BACKFILL SHALL CONTAIN NO STONES OVER 4" IN ANY DIMENSION.

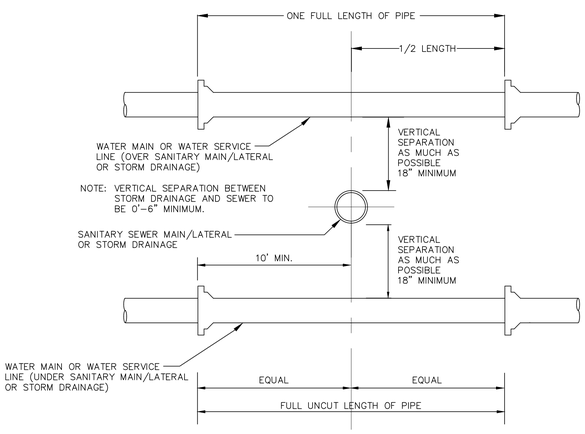

WATER & SEWER CROSSING DETAIL

NOT TO SCALE

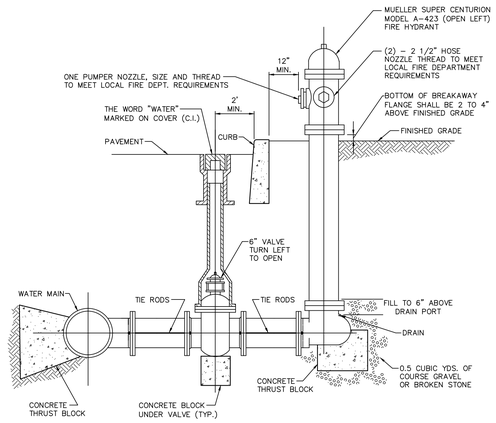

HYDRANT DETAIL

NOT TO SCALE

NOTES:

1. HYDRANT SHALL BE MUELLER SUPER CENTURION MODEL A-423 (OPEN LEFT).
2. HYDRANT SHALL BE PAINTED IN ACCORDANCE WITH AWWA STANDARDS (C502, SEC. 4.13)
3. WHERE GROUND WATER RISES TO WITHIN 2 FEET OF A FIRE HYDRANT BASE, THE DRAIN PORT SHALL BE PLUGGED. ANY HYDRANT THAT IS PLUGGED SHALL BE LABELED IN A MANNER SATISFACTORY TO THE LOCAL FIRE DEPARTMENT AND WATER DEPARTMENT TO ENSURE THAT THE HYDRANT IS PUMPED OUT AFTER EACH USE.

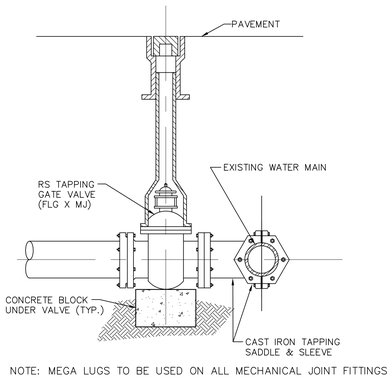

NOTE: MEGA LUGS TO BE USED ON ALL MECHANICAL JOINT FITTINGS

WET TAP DETAIL

NOT TO SCALE

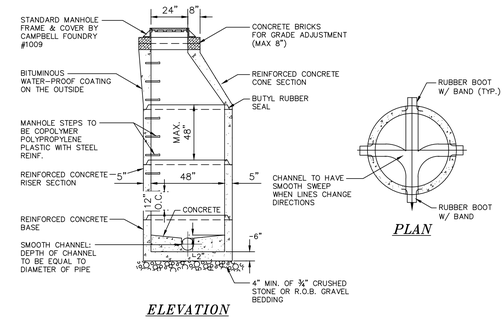

ELEVATION

PLAN

PRE-CAST MANHOLE

NOT TO SCALE

NOTES:

1. SMOOTH CHANNEL INVERT TO BE PAVED WITH CEMENT MORTAR.
2. PIPE JOINTS SHALL BE A MINIMUM OF 2' FROM OUTSIDE WALL OF MANHOLE.
3. SANITARY SEWER TO EXTEND INTO THE MANHOLE ONLY TO A POINT WHERE OUTSIDE OF SEWER MEETS INSIDE WALL OF MANHOLE.
4. OPENING FOR PIPE SHALL BE PRE-CAST. CONNECTIONS TO EXISTING MANHOLES SHALL BE MACHINE CORED.
5. MANHOLE COVERS TO BE STAMPED "SANITARY".
6. PRECAST REINFORCED CONCRETE MANHOLE SHALL BE DESIGNED FOR H20 LIVE LOAD.

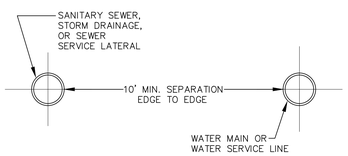

WATER & SEWER HORIZONTAL SEPARATION

NOT TO SCALE

NOTE: THE SEPARATION REQUIREMENT SHALL CONFORM TO CURRENT ORANGE COUNTY DEPARTMENT OF HEALTH STATUTES, CODES, RULES, REGULATIONS AND LAWS AS THEY APPLY.

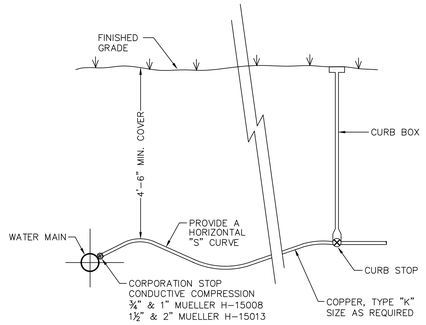

DETAIL – WATER SERVICE

NOT TO SCALE

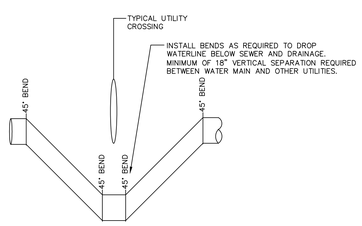

TYPICAL WATERLINE SEPARATION

NOT TO SCALE

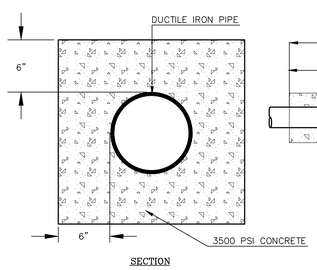

SECTION

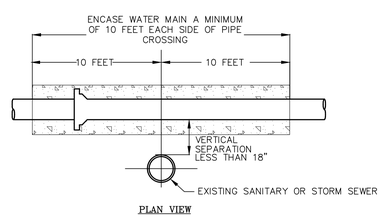

PLAN VIEW

NOTE:
WATER MAIN TO BE ENCASED PER DETAIL ONLY WHERE 10' HORIZONTAL OR 18" VERTICAL SEPARATION CANNOT BE MAINTAINED AND ONLY AT THE DIRECTION AND APPROVAL OF THE SITE ENGINEER.

PIPE ENCASEMENT DETAIL

NOT TO SCALE

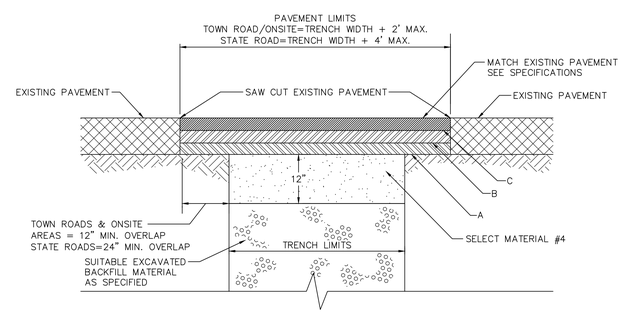

1. MATCH EXISTING PAVEMENT THICKNESS IN ALL AREAS OR PLACE AS A MINIMUM THE FOLLOWING:

WITHIN STATE R.O.W.:(ONLY PERMITTED OPEN CUTS):

A) 8" BASE (NYSDOT 402.376902 – 37mm F9)
B) 2½" BINDER (NYSDOT 402.196902 – 19mm F9)
C) 1½" TOP (NYSDOT 402.126102 – 12.5mm F1)

TOWN ROADS:

B) 3" BINDER (N.Y.S.D.O.T. TYPE #3)
C) 2" TOP COURSE (N.Y.S.D.O.T. TYPE 6F)

DRIVEWAYS/PARKING LOTS:

B) 3" DENSE BINDER (N.Y.S.D.O.T. TYPE #3)
C) 2" TOP COURSE (N.Y.S.D.O.T. TYPE #6F)

TRENCH LIMIT/PAVEMENT REPLACEMENT DETAIL

NOT TO SCALE

COPIES FROM THE ORIGINAL OF THIS DOCUMENT NOT MARKED WITH AN ORIGINAL OF THE PROFESSIONAL ENGINEER'S AND/OR LAND SURVEYOR'S STAMP OR EMBOSSED SEAL SHALL NOT BE CONSIDERED VALID, TRUE COPIES.

UNAUTHORIZED ALTERATION OR ADDITION TO THIS DOCUMENT IS A VIOLATION OF SECTION 7209-2 OF THE NEW YORK STATE EDUCATION LAW.

COPYRIGHT 2016, LANC & TULLY, P.C.

LANC & TULLY
ENGINEERING AND SURVEYING, P.C.
P.O. Box 687, Rt. 207
Goshen, N.Y. 10924
(845) 294-3700

MERLIN ENTERTAINMENTS
FORREC
MASER CONSULTING P.A.

CONSTRUCTION DETAILS 2

LEGOLAND NEW YORK
TOWN OF GOSHEN
ORANGE COUNTY, NEW YORK

Revisions:

No.	Description	Issue Date
1	PLAN DEVELOPMENT	SEPTEMBER 1, 2016
2	PLAN DEVELOPMENT	NOVEMBER 3, 2016
3	FEIS SITEPLAN	MAY 18, 2017

CAD File: 160042-CONST DETAILS	
Layout: CONST DTLS 2	
Drawn By: MK	Checked By: JOR
Scale: N/A	Project No.: 16-0042
Tax Map No.: SEE SHEET 2	
Date: JULY 21, 2016	
Sheet/Drawing No.: C 35 OF 40	

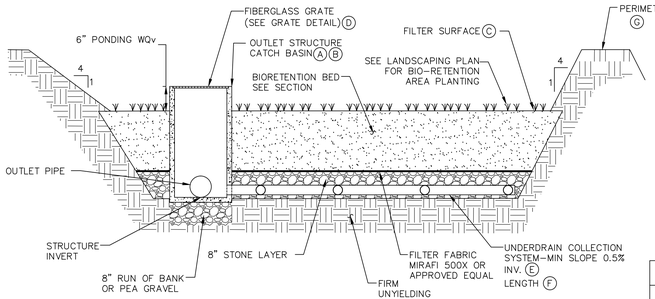

SECTION

BIO-RETENTION AREA DETAIL

NOT TO SCALE

BIORETENTION AREA MAINTENANCE REQUIREMENTS:
INSPECTION SHALL BE MADE WEEKLY BY A LICENSED PROFESSIONAL AND AFTER EVERY ½" RAINFALL EVENT BY THE OWNER OR CONTRACTOR DURING CONSTRUCTION. DURING THE FIRST GROWING SEASON INSPECTIONS SHALL BE CONDUCTED MONTHLY AND BI ANNUALLY THEREAFTER. THE FOLLOWING TASKS SHALL BE PERFORMED AS NEEDED:

1. REMOVAL OF ACCUMULATED SEDIMENT AND CLEANING AND/OR RESTORATION OF THE FILTER BED AREAS WHENEVER ACCUMULATED SEDIMENT REACHES A DEPTH OF 1 INCH.
2. RESTORATION OF ANY DISTURBED PLANT MATERIAL AND ANY ERODED EMBANKMENTS. REPLACEMENT OF PROPOSED PLANTS SHALL OCCUR IF MORE THEN 50% OF THE COVERAGE OF THE FACILITY IS NOT ACHIEVED.
3. REMOVAL OF ACCUMULATED DEBRIS WITHIN THE FILTER BED AREAS AND AT ALL INLET AND OUTFALL STRUCTURES.
4. ANNUAL MOWING (EARLY WINTER) OF THE BASINS. TRIMMING AND PRUNING OF BUSHES. REMOVAL OF ANY FALLEN TREES OR LIMBS.
5. WHEN THE FILTERING CAPACITY OF THE FILTER DIMINISHES SUBSTANTIALLY (I.E., WHEN WATER PONDS ON THE SURFACE OF THE FILTER BED FOR MORE THAN 48 HOURS), THE TOP FEW INCHES OF DISCOLORED MATERIAL SHALL BE REMOVED AND SHALL BE REPLACED WITH FRESH MATERIAL. THE REMOVED SEDIMENTS SHALL BE DISPOSED IN AN ACCEPTABLE MANNER (I.E., LANDFILL).
6. REFER TO LANDSCAPING PLANS FOR PLANTING REQUIREMENTS. IF FOR ANY REASON A CONFLICT OF PLANT MATERIAL OR PLANT MAINTENANCE SHOULD OCCUR, THE LANDSCAPE PLANS ARE TO TAKE PRECEDENCE.

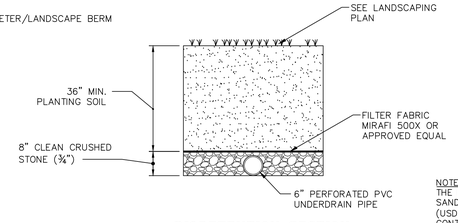

BIORETENTION SECTION

NOTES:
THE PLANTING SOIL SHOULD BE A SANDY LOAM, LOAMY SAND, LOAM (USDA), OR A LOAM/SAND MIX (SHOULD CONTAIN A MINIMUM 35 TO 60% SAND, BY VOLUME). THE CLAY CONTENT FOR THESE SOILS SHOULD BY LESS THAN 25% BY VOLUME. SOILS SHOULD FALL WITHIN THE SM, OR ML CLASSIFICATIONS OF THE UNIFIED SOIL CLASSIFICATION SYSTEM (USCS). A PERMEABILITY OF AT LEAST 1.0 FEET PER DAY (0.5"/HR) IS REQUIRED (A CONSERVATIVE VALUE OF 0.5 FEET PER DAY IS USED FOR DESIGN). THE SOIL SHOULD BE FREE OF STONES, STUMPS, ROOTS, OR OTHER WOODY MATERIAL OVER 1" IN DIAMETER. BRUSH OR SEEDS FROM NOXIOUS WEEDS. PLACEMENT OF THE PLANTING SOIL SHOULD BE IN LIFTS OF 12 TO 18", LOOSELY COMPACTED (TAMPED LIGHTLY WITH A DOZER OR BACKHOE BUCKET).

BIO-RETENTION AREA DATA

	BIO-RETENTION AREA OUTLET STRUCTURE	A
A	OUTLET STRUCTURE DIMENSIONS (OUTSIDE)	48"x48"
B	TOP OF STRUCTURE ELEVATION	–
C	FILTER SURFACE ELEVATION	–
D	FIBERGLASS GRATE DIMENSION	42"x42"
E	UNDERDRAIN INVERT ELEVATION	–
F	UNDERDRAIN SYSTEM LENGTH	–
G	TOP OF PERIMETER BERM	–

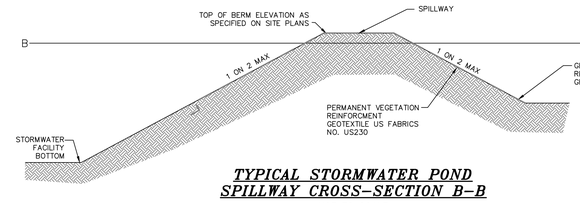

TYPICAL STORMWATER POND SPILLWAY CROSS-SECTION B-B

NOT TO SCALE

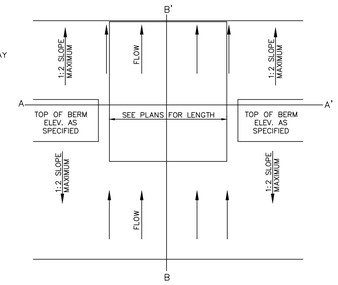

TYPICAL STORMWATER POND SPILLWAY PLAN VIEW

NOT TO SCALE

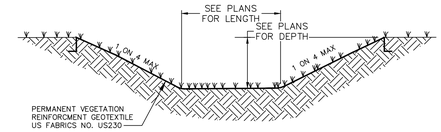

TYPICAL STORMWATER POND SPILLWAY CROSS-SECTION A-A

NOT TO SCALE

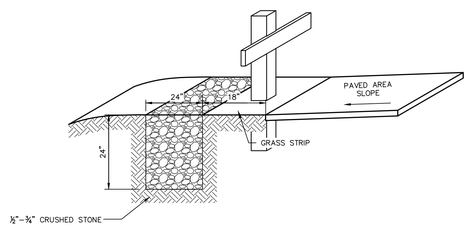

NOTE: TO BE UTILIZED IN AREAS WHERE SHEET FLOW TO BIORETENTION OR INFILTRATION AREAS IS PROPOSED.

ROAD EDGE AND GRAVEL DIAPHRAGM DETAIL

NOT TO SCALE

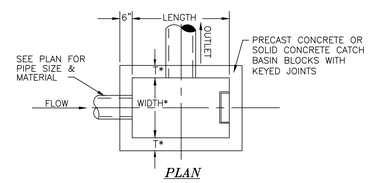

PLAN

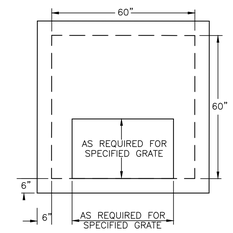

ROOF SLAB FOR OVERSIZED STRUCTURE

ROOF TO BE 8" THICK, WITH STEEL REINF.
DESIGNED FOR H-20 LOADING.

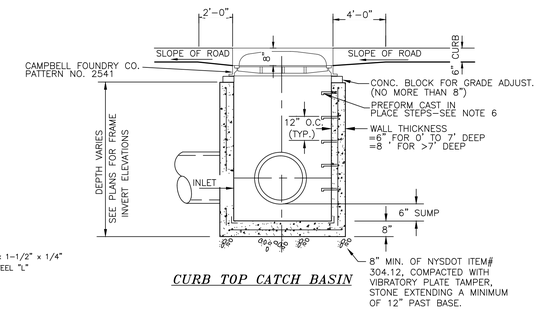

CURB TOP CATCH BASIN

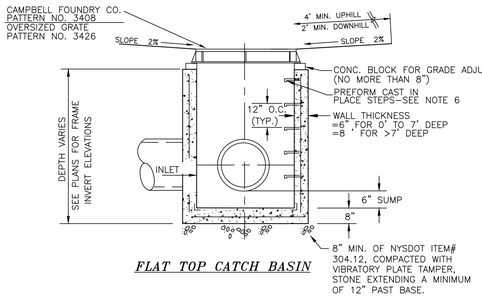

FLAT TOP CATCH BASIN

CATCH BASIN DETAIL

NOT TO SCALE

PRECAST BASIN SCHEDULE			
*PRECAST SIZE	INTERIOR LENGTH	INTERIOR WIDTH	ROOF SLAB
TYPICAL	48"	30"	NO
OVERSIZED	60"	60"	YES

*SEE NOTE 7

PLAN LEGEND
(OSS) = CATCH BASIN WITH OVERSIZED STRUCTURE AND STANDARD SIZE GRATE
(OSG) = CATCH BASIN WITH OVERSIZED STRUCTURE AND OVERSIZED GRATE

NOTES:
1. CONCRETE STRENGTH: 4000 P.S.I. @ 28 DAYS.
2. BACKFILL AROUND CATCH BASIN IS TO BE ACCEPTABLE DRY RUN OF BANK GRAVEL, FREE OF ANY STONES LARGER THAN 3" IN DIAMETER, COMPACTED IN 8" MAX. LIFTS WITH JUMPING JACK COMPACTOR, ACHIEVING 95% COMPACTION.
3. SPECIFIED CATCH BASINS ARE TO HAVE FLAT GRATES, SEE PLAN LABELS.
4. PIPES TO BE CUT FLUSH WITH INSIDE WALLS OF CATCH BASIN.
5. PIPES SHALL BE PARGED AROUND INTERIOR AND EXTERIOR PRIOR TO BACKFILLING OF STRUCTURE.
6. STEPS ARE TO BE CAMPBELL FOUNDRY CO. PATTERN NO. 2593 2254, OR APPROVED EQUAL.
7. SEE PLAN LABELS FOR SIZE OF STRUCTURE AND GRATE.

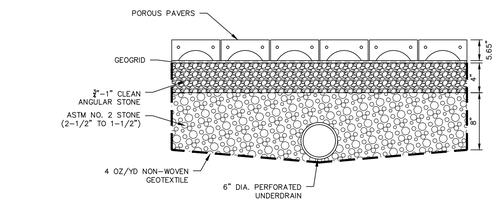

NOTES:
1. POROUS PAVERS TO BE INSTALLED IN ACCORDANCE WITH MANUFACTURER'S GUIDELINES.
2. POROUS PAVER COLOR TO BE SELECTED BY OWNER.
3. SUBGRADE TO BE PITCHED TOWARDS UNDERDRAIN LOCATIONS.
4. UNDERDRAINS TO BE CONNECTED TO CATCH BASINS AS SHOWN ON SITE PLAN.
5. TYPE OF GEOGRID AS RECOMMENDED BY POROUS PAVER MANUFACTURER.

POROUS PAVER DETAIL

NOT TO SCALE

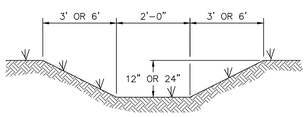

GRASS SWALE DETAIL

NOT TO SCALE

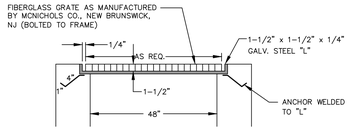

GRATE DETAIL

NOT TO SCALE

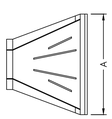

PIPE DIAMETER						
DIMENSION	10/12	15	18	24	30	36
A	42	41	49	59.5	88	88
B	14.5	19	22	28	36	43
C	33	34	43	48	63.5	66.5
D	6	6	6	6	6	6

NOTE: ALL MEASUREMENTS IN INCHES

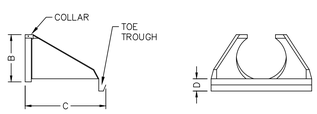

HDPE FLARED END SECTION

NOT TO SCALE

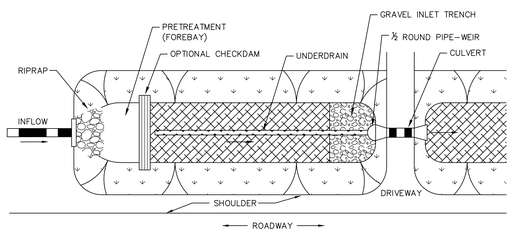

PLAN VIEW

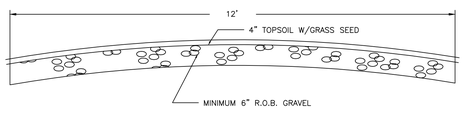

GRAVEL SHALL CONFROM TO THE FOLLOWING GRADATION REQUIREMENTS:

SIEVE SIZE	% PASSING BY WEIGHT
2"	100
1/4"	30-65
NO 200	10-20

POND MAINTENANCE ACCESS DETAIL

NOT TO SCALE

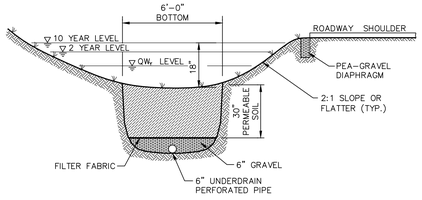

SECTION

DRY SWALE DETAIL

NOT TO SCALE

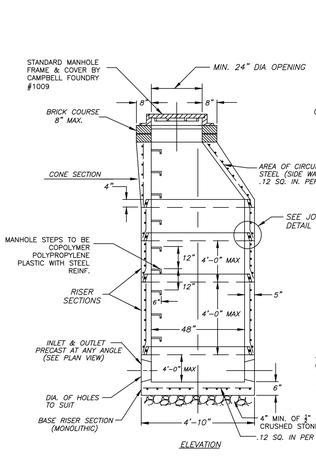

NOTES:
CONCRETE TO TEST 4000 PSI @ 28 DAYS IN CONFORMANCE WITH ASTM C-478
DESIGN FOR H20 LOADING

CONE DIMENSIONS	
DIA OPENING	HEIGHT
24"	36"

PRE CAST CONCRETE STORM MANHOLE DETAIL

NOT TO SCALE

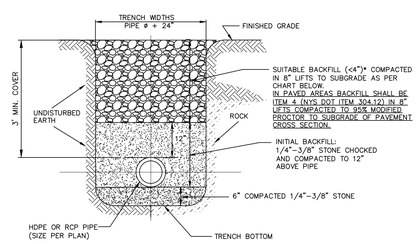

EARTH OR ROCK EXCAVATION

ACCEPTABLE BACKFILL MATERIAL & COMPACTION REQUIREMENTS				
DESCRIPTION	SOIL CLASSIFICATION ASTM D2321	ASTM D2487	AASHTO M43	MINIMUM STANDARD PROCTOR DENSITY %
GRADED OR CRUSHED, CRUSHED STONE, GRAVEL	CLASS I	–	5 56	DUMPED
SAND, GRAVELS AND GRAVEL/SAND MIXTURES; LITTLE OR NO FINES	CLASS II	GW GP SW SP	57 6	85%
SILTY OR CLAYEY GRAVELS, GRAVEL/SAND/SILT OR GRAVEL AND CLAY MIXTURES; SILTY OR CLAYEY SANDS, SAND/CLAY OR SAND/SILT MIXTURES	CLASS III	GM GC SM SC	GRAVEL AND SAND (<10% FINES)	90%

NOTE: INORGANIC SILTS, CLAYS, AND OTHER CLASS IV MATERIAL SHALL NOT PERMITTED.

* BACKFILL SHALL CONTAIN NO STONES OVER 4" IN ANY DIMENSION.

STORM SEWER TRENCH CROSS SECTION

NOT TO SCALE

COPYRIGHT 2016, LANC & TULLY, P.C.

LANC & TULLY
ENGINEERING AND SURVEYING, P.C.
P.O. Box 687, Rt. 207
Goshen, N.Y. 10924
(845) 294-3700

MERLIN ENTERPRISES
FORREC
MASER CONSULTING P.A.

DRAINAGE DETAILS 1

LEGOLAND NEW YORK
TOWN OF GOSHEN
ORANGE COUNTY, NEW YORK

Revisions:

No.	Description	Issue Date
1	PLAN DEVELOPMENT	SEPTEMBER 1, 2016
2	PLAN DEVELOPMENT	NOVEMBER 3, 2016
3	FEIS SITEPLAN	MAY 18, 2017

CAD File:	160042-CONST DETAILS
Layout:	DRAINAGE DTLS 1
Drawn By: ESR	Checked By: JOR
Scale: N/A	Project No.: 16-0042
Tax Map No.:	SEE SHEET 2
Date:	JULY 21, 2016
Sheet/Drawing No.:	C 36 OF 40

COPIES FROM THE ORIGINAL OF THIS DOCUMENT NOT MARKED WITH AN ORIGINAL OF THE PROFESSIONAL ENGINEER'S AND/OR LAND SURVEYOR'S STAMP OR EMBOSSED SEAL SHALL NOT BE CONSIDERED VALID, TRUE COPIES.

UNAUTHORIZED ALTERATION OR ADDITION TO THIS DOCUMENT IS A VIOLATION OF SECTION 7209-2 OF THE NEW YORK STATE EDUCATION LAW.

CULTEC RECHARGER® 902HD PRODUCT SPECIFICATIONS

GENERAL
CULTEC RECHARGER® 902HD CHAMBERS ARE DESIGNED FOR UNDERGROUND STORMWATER MANAGEMENT. THE CHAMBERS MAY BE USED FOR RETENTION, RECHARGING, DETENTION OR CONTROLLING THE FLOW OF ON-SITE STORMWATER RUNOFF.

CHAMBER PARAMETERS
1. THE CHAMBERS SHALL BE MANUFACTURED IN THE U.S.A. BY CULTEC, INC. OF BROOKFIELD, CT. (203-775-4416 OR 1-800-428-5832)
2. THE CHAMBER SHALL BE STRUCTURAL FOAM INJECTION MOLDED OF BLUE VIRGIN HIGH MOLECULAR WEIGHT IMPACT MODIFIED POLYPROPYLENE.
3. THE CHAMBER SHALL BE ARCHED IN SHAPE.
4. THE CHAMBER SHALL BE OPEN-BOTTOMED.
5. THE CHAMBER SHALL BE JOINED USING AN INTERLOCKING OVERLAPPING RIB METHOD. CONNECTIONS MUST BE FULLY SHOULDERED OVERLAPPING RIBS, HAVING NO SEPARATE COUPLINGS.
6. THE NOMINAL CHAMBER DIMENSIONS OF THE CULTEC RECHARGER® 902HD SHALL BE 48 INCHES (1219 mm) TALL, 78 INCHES (1981 mm) WIDE AND 4.10 FEET (1.25 mm) LONG. THE INSTALLED LENGTH OF A JOINED RECHARGER® 902HD SHALL BE 3.67 FEET (1.12 m).
7. MULTIPLE CHAMBERS MAY BE CONNECTED TO FORM DIFFERENT LENGTH ROWS. EACH ROW SHALL BEGIN AND END WITH A SEPARATELY FORMED CULTEC RECHARGER® 902HD END CAP. MAXIMUM INLET OPENING ON THE END CAP IS 24 INCHES (600 mm).
8. THE CHAMBER SHALL HAVE TWO SIDE PORTALS TO ACCEPT CULTEC HVLV™ FC-48 FEED CONNECTORS TO CREATE AN INTERNAL MANIFOLD. MAXIMUM ALLOWABLE PIPE SIZE IN THE SIDE PORTAL IS 11.5 INCHES (292 mm).
9. THE NOMINAL CHAMBER DIMENSIONS OF THE CULTEC HVLV™ FC-48 FEED CONNECTOR SHALL BE 12 INCHES (305 mm) TALL, 16 INCHES (406 mm) WIDE AND 49 INCHES (1245 mm) LONG.
10. THE NOMINAL STORAGE VOLUME OF THE RECHARGER® 902HD CHAMBER SHALL BE 17.66 FT3 / FT (1.641 m3 / m) - WITHOUT STONE. THE NOMINAL STORAGE VOLUME OF A JOINED RECHARGER® 902HD SHALL BE 64.75 FT3 / UNIT (1.834 m3 / UNIT) - WITHOUT STONE.
11. THE NOMINAL STORAGE VOLUME OF THE HVLV™ FC-48 FEED CONNECTOR SHALL BE 0.913 FT3 / FT (0.085 m3 / m) - WITHOUT STONE.
12. THE RECHARGER® 902HD CHAMBER SHALL HAVE TWENTY-FOUR DISCHARGE HOLES BORED INTO THE SIDEWALLS OF THE UNIT'S CORE TO PROMOTE LATERAL CONVEYANCE OF WATER.
13. THE RECHARGER® 902HD CHAMBER SHALL HAVE 7 CORRUGATIONS.
14. THE CHAMBER SHALL BE DESIGNED TO WITHSTAND AASHTO HS-25 DEFINED LOADS WHEN INSTALLED ACCORDING TO CULTEC'S RECOMMENDED INSTALLATION INSTRUCTIONS.
15. THE CHAMBER SHALL HAVE A RAISED INTEGRAL CAP AT THE TOP OF THE ARCH NEAR THE CENTER OF EACH UNIT TO BE USED AS AN OPTIONAL INSPECTION PORT OR CLEAN-OUT.
16. THE UNITS MAY BE TRIMMED TO CUSTOM LENGTHS BY CUTTING BACK TO ANY CORRUGATION.
17. THE CHAMBER SHALL BE MANUFACTURED IN A FACILITY EMPLOYING CULTEC'S QUALITY CONTROL AND ASSURANCE PROCEDURES.
18. MAXIMUM ALLOWABLE COVER OVER THE TOP OF THE CHAMBER SHALL BE 8.3 FEET (2.53 m).

END CAP PARAMETERS
1. THE CULTEC RECHARGER® 902HD END CAP (REFERRED TO AS 'END CAP') SHALL BE MANUFACTURED IN THE U.S.A. BY CULTEC, INC. OF BROOKFIELD, CT. (203-775-4416 OR 1-800-428-5832)
2. THE END CAP SHALL BE TWIN-SHEET THERMOFORMED OF BLACK VIRGIN HIGH MOLECULAR WEIGHT POLYETHYLENE.
3. THE END CAP SHALL BE JOINED AT THE BEGINNING AND END OF EACH ROW OF CHAMBERS USING AN INTERLOCKING OVERLAPPING RIB METHOD. CONNECTIONS MUST BE FULLY SHOULDERED OVERLAPPING RIBS, HAVING NO SEPARATE COUPLINGS.
4. THE NOMINAL DIMENSIONS OF THE END CAP SHALL BE 48.5 INCHES (1231 mm) TALL, 78 INCHES (1982 mm) WIDE AND 9.7 INCHES (246 mm) LONG. WHEN JOINED WITH A RECHARGER 902HD CHAMBER, THE INSTALLED LENGTH OF THE END CAP SHALL BE 6.2 INCHES (157 mm).
5. MAXIMUM INLET OPENING ON THE END CAP IS 24 INCHES (600 mm).
6. THE END CAP SHALL BE DESIGNED TO WITHSTAND AASHTO HS-25 DEFINED LOADS WHEN INSTALLED ACCORDING TO CULTEC'S RECOMMENDED INSTALLATION INSTRUCTIONS.

CULTEC HVLV FC-48 FEED CONNECTOR PRODUCT SPECIFICATIONS

GENERAL
CULTEC HVLV FC-48 FEED CONNECTORS ARE DESIGNED TO CREATE AN INTERNAL MANIFOLD FOR CULTEC RECHARGER MODEL 902HD STORMWATER CHAMBERS.

FEED CONNECTOR PARAMETERS
1. THE FEED CONNECTOR SHALL BE MANUFACTURED BY CULTEC, INC. OF BROOKFIELD, CT. (203-775-4416 OR 1-800-428-5832)
2. THE FEED CONNECTOR SHALL BE VACUUM THERMOFORMED OF BLACK HIGH MOLECULAR WEIGHT HIGH DENSITY POLYETHYLENE (HMWHDPE).
3. THE FEED CONNECTOR SHALL BE ARCHED IN SHAPE.
4. THE FEED CONNECTOR SHALL BE OPEN-BOTTOMED.
5. THE NOMINAL DIMENSIONS OF THE CULTEC HVLV FC-48 FEED CONNECTOR SHALL BE 12 INCHES (305 mm) TALL, 16 INCHES (406 mm) WIDE AND 49 INCHES (1245 mm) LONG.
6. THE NOMINAL STORAGE VOLUME OF THE HVLV FC-48 FEED CONNECTOR SHALL BE 0.913 FT³ / FT (0.085 m³ / m) - WITHOUT STONE.
7. THE HVLV FC-48 FEED CONNECTOR SHALL HAVE 4 CORRUGATIONS.
8. THE HVLV FC-48 FEED CONNECTOR MUST BE FORMED AS A WHOLE UNIT HAVING TWO OPEN END WALLS AND HAVING NO SEPARATE END PLATES OR SEPARATE END WALLS. THE UNIT SHALL FIT INTO THE SIDE PORTALS OF THE CULTEC RECHARGER STORMWATER CHAMBER AND ACT AS CROSS FEED CONNECTIONS CREATING AN INTERNAL MANIFOLD.
9. THE FEED CONNECTOR SHALL BE DESIGNED TO WITHSTAND AASHTO HS-25 DEFINED LOADS WHEN INSTALLED ACCORDING TO CULTEC'S RECOMMENDED INSTALLATION INSTRUCTIONS.
10. THE FEED CONNECTOR SHALL BE MANUFACTURED IN AN ISO 9001:2008 CERTIFIED FACILITY.

CULTEC NO. 66™ WOVEN GEOTEXTILE

GENERAL
CULTEC NO. 66™ WOVEN GEOTEXTILE IS UTILIZED AS AN UNDERLAYMENT TO PREVENT SCOURING CAUSED BY WATER MOVEMENT WITHIN THE CULTEC CHAMBERS AND FEED CONNECTORS UTILIZING THE CULTEC MANIFOLD FEATURE.

GEOTEXTILE PARAMETERS
1. THE GEOTEXTILE SHALL BE PROVIDED BY CULTEC, INC. OF BROOKFIELD, CT. (203-775-4416 OR 1-800-428-5832)
2. THE GEOTEXTILE SHALL BE BLACK IN APPEARANCE.
3. THE GEOTEXTILE SHALL HAVE A TENSILE STRENGTH OF 315 LBS (1.40KN) PER ASTM D4632 TESTING METHOD.
4. THE GEOTEXTILE SHALL HAVE A TENSILE ELONGATION RESISTANCE OF 15% PER ASTM D4632 TESTING METHOD.
5. THE GEOTEXTILE SHALL HAVE A MULLEN BURST RESISTANCE OF 600PSI (4138 KPA) PER ASTM D3786 TESTING METHOD.
6. THE GEOTEXTILE SHALL HAVE A TEAR RESISTANCE OF 115 LBS (0.51 KN) PER ASTM D4533 TESTING METHOD.
7. THE GEOTEXTILE SHALL HAVE A PUNCTURE RESISTANCE OF 150 LBS (0.66 KN) PER ASTM D4833 TESTING METHOD.
8. THE GEOTEXTILE SHALL HAVE A CBR PUNCTURE RESISTANCE OF 900 LBS (4.00 KN) PER ASTM D6241 TESTING METHOD.
9. THE GEOTEXTILE SHALL HAVE A UV RESISTANCE OF 70% @ 500 HRS. PER ASTM D4355 TESTING METHOD.
10. THE GEOTEXTILE SHALL HAVE A PERMITTIVITY RATING OF 0.05 SEC-1 PER ASTM D4491 TESTING METHOD.
11. THE GEOTEXTILE SHALL HAVE A WATER FLOW RATING OF 4 GPM/FT2 (160 LPM/M2) PER ASTM D4491 TESTING METHOD.
12. THE GEOTEXTILE SHALL HAVE A PERCENT OPEN AREA OF <1% PER CW-02215 TESTING METHOD.
13. THE GEOTEXTILE SHALL HAVE AN APPARENT OPENING SIZE OF 40 US STD. SIEVE (0.425 MM) PER ASTM D4751 TESTING METHOD.
14. THE GEOTEXTILE SHALL CONSIST OF A 100% HIGH-TENACITY, SILT-FILM POLYPROPYLENE YARNS.

GENERAL NOTES
NOT TO SCALE

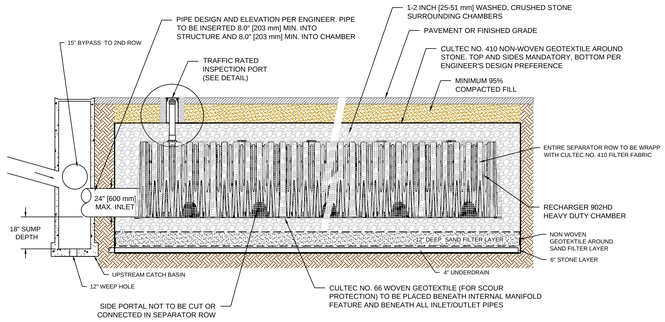

SEPARATOR ROW LONGITUDINAL SECTION
NOT TO SCALE

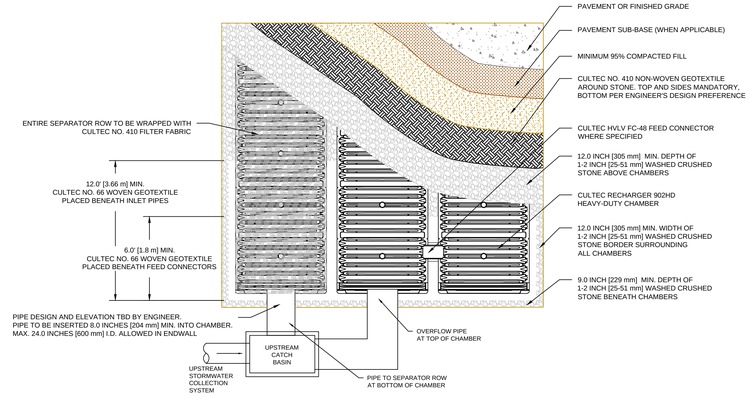

SEPARATOR ROW CONFIGURATION PLAN VIEW
NOT TO SCALE

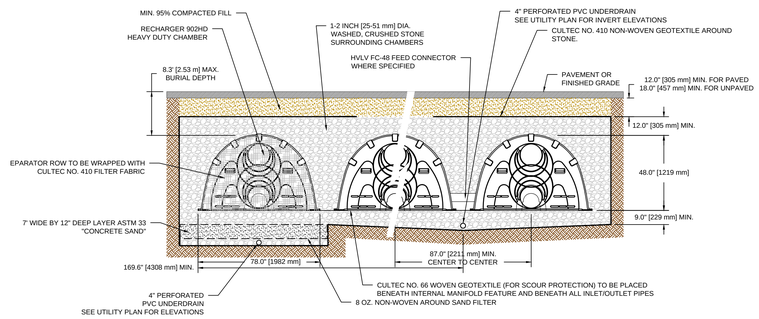

GENERAL NOTES
RECHARGER 902HD BY CULTEC, INC. OF BROOKFIELD, CT.
THE CHAMBER WILL BE DESIGNED TO WITHSTAND TRAFFIC LOADS WHEN INSTALLED ACCORDING TO CULTEC'S RECOMMENDED INSTALLATION INSTRUCTIONS.
ALL RECHARGER 902HD CHAMBERS MUST BE INSTALLED IN ACCORDANCE WITH ALL APPLICABLE LOCAL, STATE AND FEDERAL REGULATIONS.

REFER TO CULTEC, INC.'S CURRENT RECOMMENDED INSTALLATION GUIDELINES.
CALL CULTEC, INC. AT (800) 428-5832 TO ARRANGE A PRE-CONSTRUCTION MEETING.
USE RECHARGER 902HD HEAVY DUTY FOR TRAFFIC APPLICATIONS.

SAND FILTER CROSS SECTION DETAIL
NOT TO SCALE

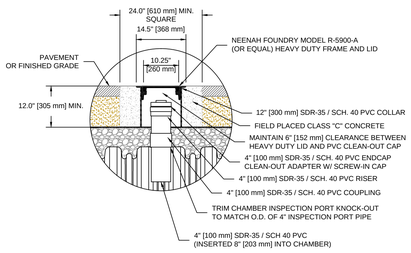

INSPECTION PORT DETAIL
NOT TO SCALE

SEPARATOR ROW™ SPECIFICATIONS

GENERAL

CULTEC'S SEPARATOR ROW IS USED AS AN INEXPENSIVE MEANS OF REMOVING TOTAL SUSPENDED SOLIDS FROM THE CHAMBER SYSTEM, AS WELL AS PROVIDING EASIER ACCESS FOR INSPECTION AND MAINTENANCE.

INSTALLATION INSTRUCTIONS

THE SEPARATOR ROW IS INSTALLED ON A 6" LAYER OF 1-2 INCH [25-51 mm] WASHED, CRUSHED STONE BASE. THE CULTEC CHAMBER MODEL USED FOR THE SEPARATOR ROW IS THE SAME CHAMBER USED THROUGHOUT THE ENTIRE CHAMBER BED.

THE CHAMBERS UTILIZED IN THE SEPARATOR ROW ARE TO BE COMPLETELY WRAPPED WITH CULTEC NO. 410™ FILTER FABRIC, OR AN APPROVED EQUAL. THIS CREATES A PASS-THROUGH FILTER ARRANGEMENT TO SEPARATE TOTAL SUSPENDED SOLIDS IN THE TRANSFER OF STORM WATER TO OTHER CHAMBERS THROUGHOUT THE UNDERGROUND STORMWATER MANAGEMENT SYSTEM.

THE RECOMMENDED INSTALLATION OF SEPARATOR ROW CHAMBERS, IN REGARD TO STONE SEPARATION AND STONE ABOVE THE UNIT ALONG WITH OTHER MINIMUM BURIAL, MATERIALS AND METHOD SPECIFICATIONS DETAILED FOR THE PROPER INSTALLATION IS THE SAME AS CULTEC'S REQUIREMENT DETAILED IN THE COMPANY'S INSTALLATION GUIDELINES WITH THE EXCEPTION OF THE PLACEMENT OF THE REQUIRED FILTERING FABRICS. PLEASE REFER TO CULTEC'S CURRENT INSTALLATION INSTRUCTIONS FOR STORMWATER CHAMBERS AS A GUIDE.

MAINTENANCE PROCEDURES

MAINTENANCE OF THE SEPARATOR™ ROW IS TO BE ACCOMPLISHED WITH A JETVAC PROCESS.

THE JETVAC IS TO BE SENT DOWN THE ENTIRE LENGTH OF THE SEPARATOR™ ROW. AS THE HIGH PRESSURE WATER NOZZLE IS RETRIEVED, THE CAPTURED SEDIMENTS ARE PUSHED BACK INTO THE MANHOLE FOR VACUUMING.

STORMWATER SYSTEM MAINTENANCE NOTES:

1. STORMWATER MANAGEMENT FACILITIES SHALL BE REGULARLY MAINTAINED TO ENSURE THEY FUNCTION AT DESIGN CAPACITY AND TO PREVENT HEALTH HAZARDS ASSOCIATED WITH DEBRIS AND STAGNANT WATER. THE PRIVATELY OWNED PORTION OF THE SYSTEM MUST BE PRIVATELY MAINTAINED.
2. RESPONSIBILITY FOR THE OPERATION AND MAINTENANCE OF THE STORMWATER FACILITIES, INCLUDING PERIODIC REMOVAL AND DISPOSAL OF ACCUMULATED PARTICULATE MATERIAL AND DEBRIS, BUT NOT LIMITED TO THE FOLLOWING: VISUAL INSPECTION OF ALL SYSTEM COMPONENTS AT LEAST ONCE A YEAR; VACUUMING OF ALL STORM SEWER INLETS ONCE A YEAR (FREQUENCY MAY BE ADJUSTED TO LONGER PERIODS IF FIRST YEAR MAINTENANCE RECORDS INDICATE THAT SEDIMENT AND DEBRIS ACCUMULATION IS INSIGNIFICANT); REVERSE FLUSHING AND VACUUMING IF SYSTEM INSPECTION INDICATE SIGNIFICANT ACCUMULATION OF SEDIMENT IN THE PIPES; AND PERIODIC REMOVAL AND DISPOSAL OF THE OTHER MATERIAL AND DEBRIS, SHALL REMAIN WITH THE OWNER OR OWNERS OF THE PROPERTY, WITH PERMANENT ARRANGEMENT THAT SHALL PASS TO ANY SUCCESSIVE OWNER, UNLESS ASSUMED BY A GOVERNMENTAL AGENCY.
3. IN THE EVENT THAT THE FACILITY BECOMES A DANGER TO PUBLIC SAFETY OR PUBLIC HEATH, OR IT IS IN NEED OF MAINTENANCE, THE OWNER SHALL EFFECT SUCH MAINTENANCE AND REPAIR OF THE FACILITY IN A MANNER THAT IS APPROVED BY THE TOWN ENGINEER OR HIS DESIGNEE. IF THE OWNER FAILS TO PERFORM SUCH MAINTENANCE AND REPAIR, THE MUNICIPALITY MAY IMMEDIATELY PROCEED TO TO SO AND SHALL BILL THE COST TO THE OWNER.

COPIES FROM THE ORIGINAL OF THIS DOCUMENT NOT MARKED WITH AN ORIGINAL OF THE PROFESSIONAL ENGINEER'S AND/OR LAND SURVEYOR'S STAMP OR EMBOSSED SEAL SHALL NOT BE CONSIDERED VALID, TRUE COPIES.

UNAUTHORIZED ALTERATION OR ADDITION TO THIS DOCUMENT IS A VIOLATION OF SECTION 7209-2 OF THE NEW YORK STATE EDUCATION LAW.

COPYRIGHT 2016, LANC & TULLY, P.C.

LANC & TULLY
ENGINEERING AND SURVEYING, P.C.
P.O. Box 687, Rt. 207
Goshen, N.Y. 10924
(845) 294-3700

MERLIN ENTERTAINMENTS
FORREC
MASER CONSULTING P.A.

DRAINAGE DETAILS 2

LEGOLAND NEW YORK
TOWN OF GOSHEN
ORANGE COUNTY, NEW YORK

Revisions: No.	Description	Issue Date
1	PLAN DEVELOPMENT	SEPTEMBER 1, 2016
2	PLAN DEVELOPMENT	NOVEMBER 3, 2016
3	FEIS SITEPLAN	MAY 18, 2017

CAD File:	160042-CONST DETAILS
Layout:	DRAINAGE DTLS 2
Drawn By: ESR	Checked By: JOR
Scale: N/A	Project No.: 16-0042
Tax Map No.:	SEE SHEET 2
Date:	JULY 21, 2016
Sheet/Drawing No.:	C 37 OF 40

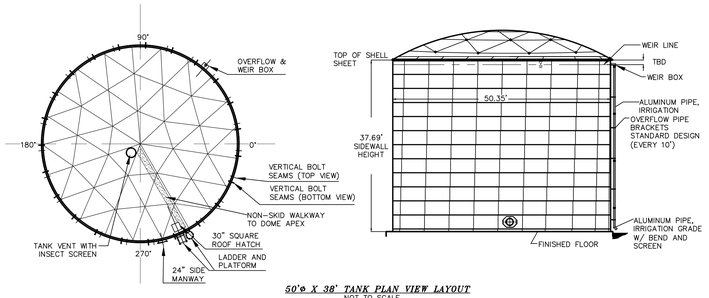

50'ø X 38' TANK PLAN VIEW LAYOUT
NOT TO SCALE

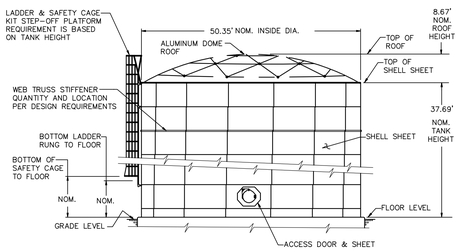

WATER TANK WITH CONCRETE FOUNDATION
NOT TO SCALE

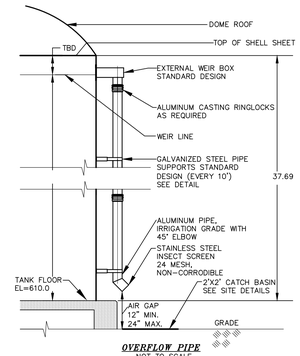

OVERFLOW PIPE
NOT TO SCALE

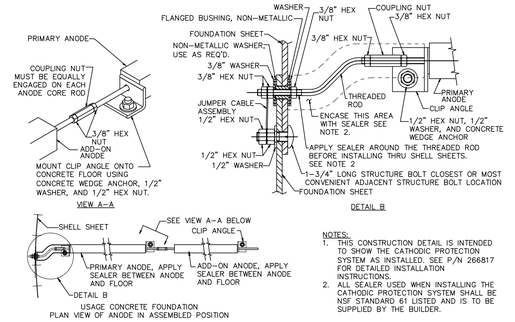

NOTES:
1. THIS CONSTRUCTION DETAIL IS INTENDED TO SHOW THE CATHODIC PROTECTION SYSTEM AS INSTALLED. SEE P/N 266817 FOR DETAILED INSTALLATION INSTRUCTIONS.
2. ALL SEALER USED WHEN INSTALLING THE CATHODIC PROTECTION SYSTEM SHALL BE NSF STANDARD 61 LISTED AND IS TO BE SUPPLIED BY THE BUILDER.

CATHODIC PROTECTION SYSTEM
NOT TO SCALE

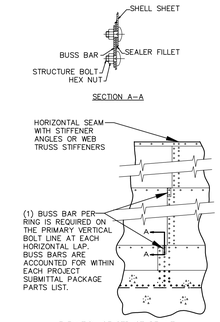

CATHODIC PROTECTION SYSTEM BUSS BAR LOCATIONS
NOT TO SCALE

ITEM	DESCRIPTION	QTY
16	STRINGER, 1/8" x 1" x 23"	2
15	CAGE BAND, 1/8" x 1-1/2" x 11"	1
14	CAGE BAND, 1/8" x 1-1/2" x 22-1/2"	3
13	WASHER, FLAT, 3/8"	37
12	NUT, HEX, 3/8"	35
11	WASHER, LOCK, 3/8"	33
10	SCREW, HEX HD CAP, 3/8" x 1-1/4"	4
9	SCREW, HEX HD CAP, 3/8" x 1"	27
8	CHAIN ASSEMBLY	2
7	EYE BOLT, 3/8"	2
6	STRAP, 1/8" x 2" x 30-1/8"	2
5	RAIL, 2" x 2" x 1/8" x 30-1/8"	2
4	GUSSET ANGLE, 2" x 2" x 1/8" x 33-1/8"	2
3	PLATFORM, 30" x 30"	1
2	POST, 2" x 2" x 1/8" x 50-1/4"	2
1	MOUNTING ANGLE, 3" x 3" x 1/4" x 85"	2
--	MANWAY PLATFORM KIT	--

GENERAL NOTES:
1. ALL STEEL COMPONENTS ARE HOT DIP GALVANIZED.
2. FASTEN COMPONENTS TOGETHER USING 3/8" DIA. STAINLESS STEEL HEX HD CAP SCREW SETS. (SETS INCLUDE ITEMS #9, 10, 11, 12, AND 13) FASTENER USAGE FOR ASSEMBLY OF THIS SECTION IS AS FOLLOWS:
   - SET OF 3/8" X 1" LONG (ITEMS #9, 11, 12, AND 13) AT (27) JOINTS.
   - SET OF 3/8" X 1-1/4" LONG (ITEM #10, 11, 12, AND 13) AT (4) JOINT.
3. POSITION OF THE PLATFORM BRACKETS TO BE DETERMINED DURING INSTALLATION. SEE PROJECT SUBMITTAL DOCUMENTATION FOR BRACKET TYPE AND QUANTITY REQUIREMENTS.
4. ATTACH (2) CHAIN ASSEMBLIES (ITEM #8) AT THE OPEN SIDE OF THE PLATFORM USING THE FOLLOWING FASTENERS AT EACH CHAIN ASSEMBLY LOCATION:
   - (1) SET 3/8" x 1" LG HHCS (ITEMS #9, 11, 12, & 13)
   - (1) SET 3/8" DIA. EYE BOLT (ITEMS #7, 11, 12, & 13)
5. THIS LADDER SECTION IS CONNECTED AT THE BOTTOM TO ANY ONE OF THE LADDER SECTIONS ILLUSTRATED ON THE FOLLOWING CONSTRUCTION DETAIL DRAWINGS:
   - 267150 LADDER SECTION – INTERMEDIATE
   - 267153 LADDER SECTION – LONG BOTTOM
   - 267152 LADDER SECTION – SHORT BOTTOM
6. LEFT HAND PLATFORM MOUNT IS SHOWN. DEPENDENT ON SITE REQUIREMENTS, THE PLATFORM MAY BE MOUNTED ON THE RIGHT HAND SIDE OF THE LADDER.

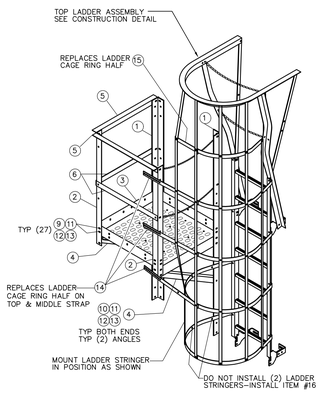

MANWAY PLATFORM AND TOP LADDER WITH SAFETY CAGE
NOT TO SCALE

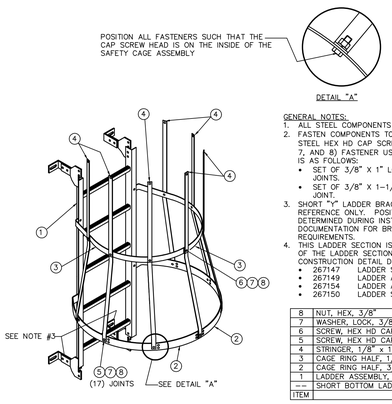

GENERAL NOTES:
1. ALL STEEL COMPONENTS ARE HOT DIP GALVANIZED.
2. FASTEN COMPONENTS TOGETHER USING 3/8" DIA. STAINLESS STEEL HEX HD CAP SCREW SETS. (SETS INCLUDE ITEMS #5, 6, 7, AND 8) FASTENER USAGE FOR ASSEMBLY OF THIS SECTION IS AS FOLLOWS:
   - SET OF 3/8" X 1" LONG (ITEMS #5, 7, AND 8) AT (17) JOINTS.
   - SET OF 3/8" X 1-1/4" LONG (ITEM #6, 7, AND 8) AT (1) JOINT.
3. SHORT "Y" LADDER BRACKET ASSEMBLIES ARE SHOWN FOR REFERENCE ONLY. POSITION OF THE BRACKETS TO BE DETERMINED DURING INSTALLATION. SEE PROJECT SUBMITTAL DOCUMENTATION FOR BRACKET TYPE AND QUANTITY REQUIREMENTS.
4. THIS LADDER SECTION IS CONNECTED AT THE TOP TO ANY ONE OF THE LADDER SECTIONS ILLUSTRATED ON THE FOLLOWING CONSTRUCTION DETAIL DRAWINGS:
   - 267147 LADDER SECTION – TOP
   - 267149 LADDER AND PLATFORM SECTION – OPEN TOP
   - 267154 LADDER AND MANWAY PLATFORM SECTION
   - 267150 LADDER SECTION – INTERMEDIATE

ITEM	DESCRIPTION	QTY
8	NUT, HEX, 3/8"	18
7	WASHER, LOCK, 3/8"	18
6	SCREW, HEX HD CAP, 3/8" x 1 1/4"	1
5	SCREW, HEX HD CAP, 3/8" x 1"	17
4	STRINGER, 1/8" x 1" x 23"	14
3	CAGE RING HALF, 1/8" x 1-1/2" x 13-1/2" R.	2
2	CAGE RING HALF, 3/16" x 3" x 17-1/2" R.	2
1	LADDER ASSEMBLY, SHORT	1
--	SHORT BOTTOM LADDER & SAFETY CAGE KIT	--

LADDER SECTION SHORT BOTTOM WITH SAFETY CAGE
NOT TO SCALE

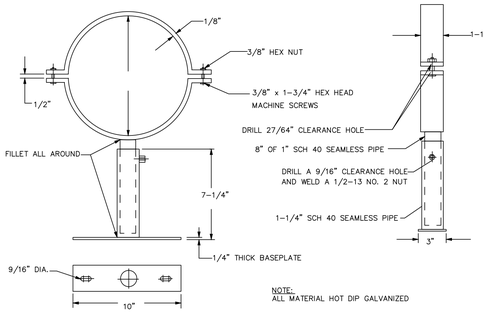

NOTE:
ALL MATERIAL HOT DIP GALVANIZED

PIPE SUPPORT BRACKETS
NOT TO SCALE

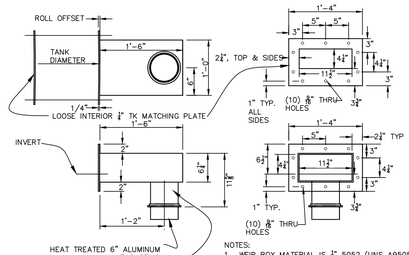

NOTES:
1. WEIR BOX MATERIAL IS 1/4" 5052 (UNS A95052) ALUMINUM PLATE.
2. GOOD FOR UP TO 222 GPM.
3. PROVIDE (1) RECTANGULAR LOOSE BACKER FLANGE, 16"X10 1/4", OF 1/4" PLATE, AS SHOWN, MANUFACTURED TO FIT TANK DIA.SPECIFIED.

6" WEIR BOX
NOT TO SCALE

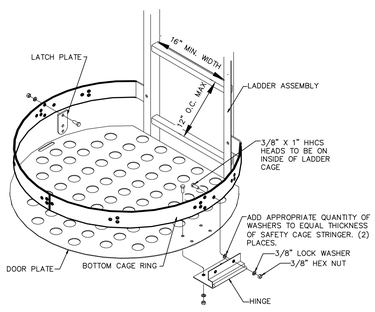

LADDER DOOR ASSEMBLIES
NOT TO SCALE

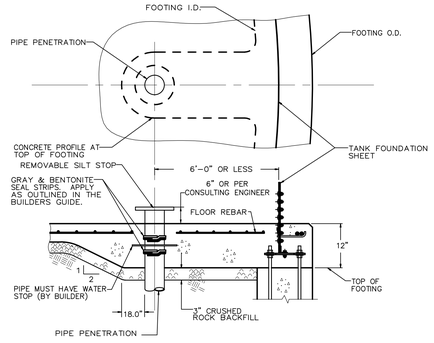

THIS IS A TYPICAL PIPE PENETRATION DETAIL THROUGH THE FOUNDATION FLOOR WHEN THE PIPE IS LOCATED 6'-0" OR LESS FROM THE TANK INSIDE WALL.

FOR FOUNDATION CONCRETE REINFORCEMENT STEEL REFER TO THE PROJECT SUBMITTAL DOCUMENTATION.

TYPICAL PIPE PENETRATION SHORT STARTER CONCRETE FLOOR
NOT TO SCALE

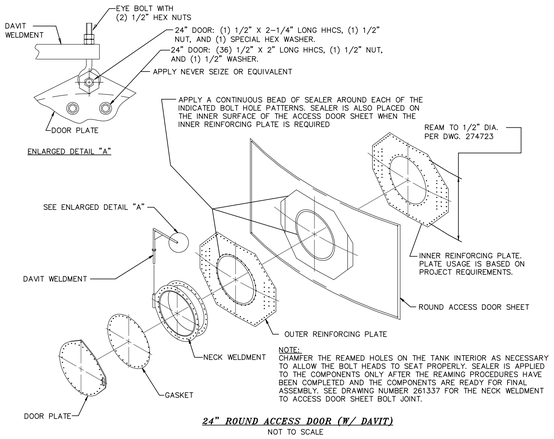

NOTE:
CHAMFER THE REAMED HOLES ON THE TANK INTERIOR AS NECESSARY TO ALLOW THE BOLT HEADS TO SEAT PROPERLY. SEALER IS APPLIED TO THE COMPONENTS ONLY AFTER THE REAMING PROCEDURES HAVE BEEN COMPLETED AND THE COMPONENTS ARE READY FOR FINAL ASSEMBLY. SEE DRAWING NUMBER 261337 FOR THE NECK WELDMENT TO ACCESS DOOR SHEET BOLT JOINT.

24" ROUND ACCESS DOOR (W/ DAVIT)
NOT TO SCALE

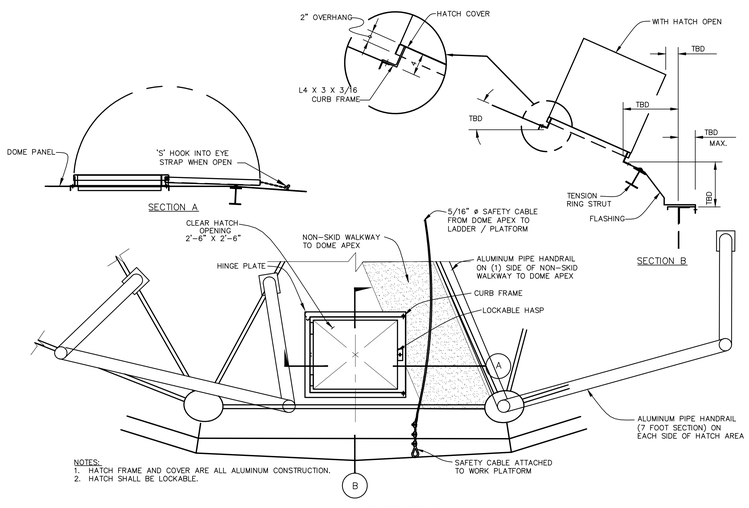

NOTES:
1. HATCH FRAME AND COVER ARE ALL ALUMINUM CONSTRUCTION.
2. HATCH SHALL BE LOCKABLE.

HATCH DETAIL
NOT TO SCALE

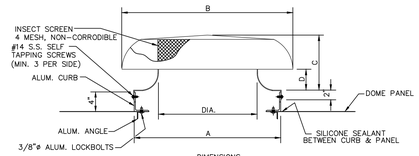

DIMENSIONS

MODEL	A	B	C	D	DIA.	DAMPER SEAL	CURB MATERIAL	SHROUD MATERIAL
20"	30 35	11	1/4"	4 1/4"	20 5/16"	20 X 20	.064	.064

RELIEF PERFORMANCE CAPACITIES (CFM)

MODEL	THROAT AREA(FT.)^2	.04PD	.06PD	.08PD	.10PD	.125PD	.187PD	.250PD	.300PD	.350PD
20"	2.25	1220	1520	1785	1995	2235	2730	3166	3513	3859

INTAKE PERFORMANCE CAPACITIES (CFM)

MODEL	THROAT AREA(FT.)^2	.04PD	.06PD	.08PD	.10PD	.125PD	.187PD	.250PD	.300PD	.350PD
20"	2.25	1111	1368	1565	1745	1923	2399	2735	3003	3232

NOTE: DIMENSIONS ARE NOMINAL CAPACITIES ARE MINIMUMS

VENTILATOR SPECIFICATIONS
NOT TO SCALE

COPIES FROM THE ORIGINAL OF THIS DOCUMENT NOT MARKED WITH AN ORIGINAL OF THE PROFESSIONAL ENGINEER'S AND/OR LAND SURVEYOR'S STAMP OR EMBOSSED SEAL SHALL NOT BE CONSIDERED VALID, TRUE COPIES.

UNAUTHORIZED ALTERATION OR ADDITION TO THIS DOCUMENT IS A VIOLATION OF SECTION 7209-2 OF THE NEW YORK STATE EDUCATION LAW.

COPYRIGHT 2016, LANC & TULLY, P.C.

LANC & TULLY
ENGINEERING AND SURVEYING, P.C.
P.O. Box 687, Rt. 207
Goshen, N.Y. 10924
(845) 294-3700

MERLIN ENTERTAINMENTS
FORREC
MASER CONSULTING P.A.

TYPICAL AQUASTORE WATER TANK DETAILS

LEGOLAND NEW YORK
TOWN OF GOSHEN
ORANGE COUNTY, NEW YORK

Revisions:

No.	Description	Issue Date
1	PLAN DEVELOPMENT	SEPTEMBER 1, 2016
2	PLAN DEVELOPMENT	NOVEMBER 3, 2016
3	FEIS SITEPLAN	MAY 18, 2017

CAD File: 160042-WATER-SEWER DETAILS
Layout: TANK DTLS
Drawn By: MK
Checked By: JOR
Scale: N/A
Project No.: 16-0042
Tax Map No.: SEE SHEET 2
Date: JULY 21, 2016
Sheet/Drawing No.: C 38 OF 40

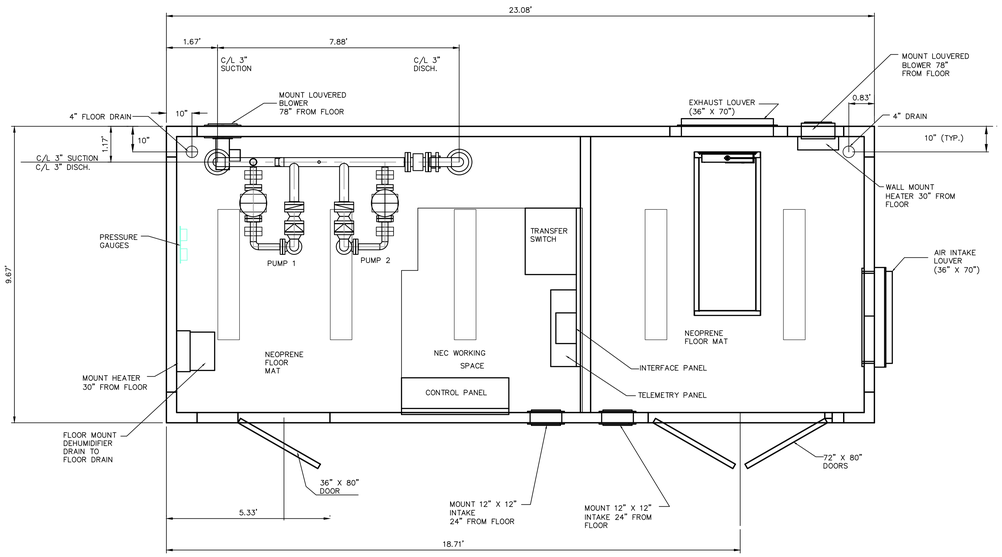

PLAN

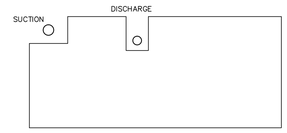

CONCRETE SLAB LAYOUT

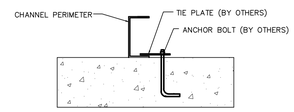

ANCHOR SYSTEM

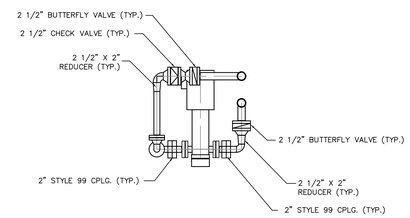

PUMPS 1 & 2

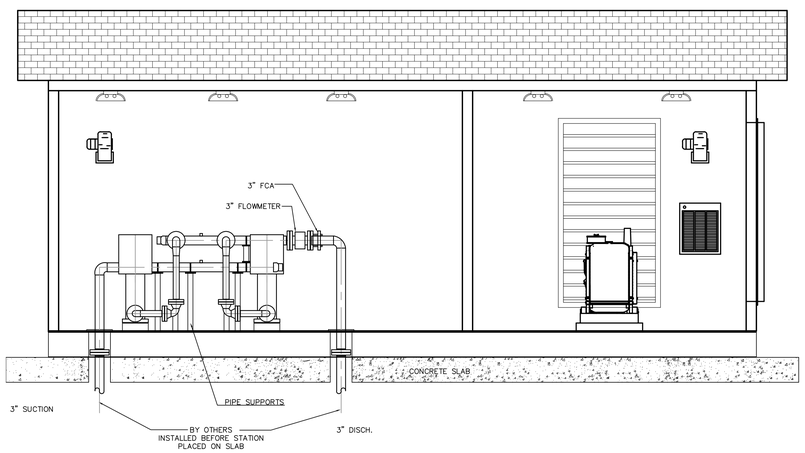

REAR ELEVATION

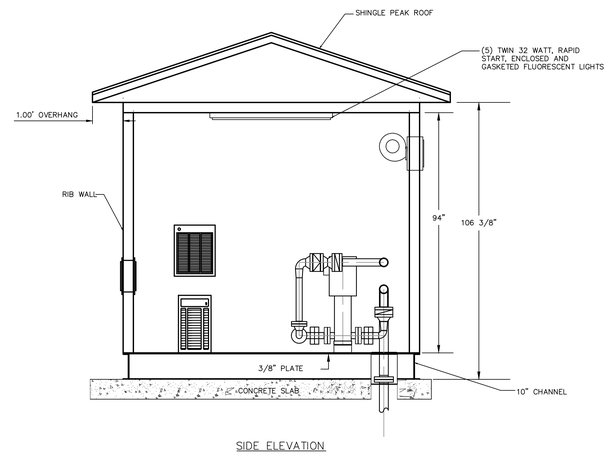

SIDE ELEVATION

NOTES:

1. CUSTOM DESIGNED TURN KEY "AQUA PAK" PACKAGE WATER BOOSTER PUMP STATION AS MANUFACTURED BY USEMCO.
2. INCLUDES ALL ELECTRICAL, CONTROL AND STANDBY POWER GENERATING EQUIPMENT AND APPURTENANCES.
3. EXTERIOR FINISHES TO BE DETERMINED.

COPYRIGHT 2016, LANC & TULLY, P.C.

LANC & TULLY
ENGINEERING AND SURVEYING, P.C.
P.O. Box 687, Rt. 207
Goshen, N.Y. 10924
(845) 294-3700

MERLIN ENTERTAINMENTS

FORREC

MASER CONSULTING P.A.

WATER BOOSTER STATION DETAILS

LEGOLAND NEW YORK

TOWN OF GOSHEN
ORANGE COUNTY, NEW YORK

Revisions:

No.	Description	Issue Date
1	PLAN DEVELOPMENT	SEPTEMBER 1, 2016
2	PLAN DEVELOPMENT	NOVEMBER 3, 2016
3	FEIS SITEPLAN	MAY 18, 2017

CAD File: 160042-WATER-SEWER DETAILS
Layout: Booster Sta
Drawn By: dmk
Checked By: JOR
Scale: N/A
Project No.: 16-0042
Tax Map No.: SEE SHEET 2
Date: JULY 21, 2016
Sheet/Drawing No.: C 39 OF 40

COPIES FROM THE ORIGINAL OF THIS DOCUMENT NOT MARKED WITH AN ORIGINAL OF THE PROFESSIONAL ENGINEER'S AND/OR LAND SURVEYOR'S STAMP OR EMBOSSED SEAL SHALL NOT BE CONSIDERED VALID, TRUE COPIES.

UNAUTHORIZED ALTERATION OR ADDITION TO THIS DOCUMENT IS A VIOLATION OF SECTION 7209-2 OF THE NEW YORK STATE EDUCATION LAW.

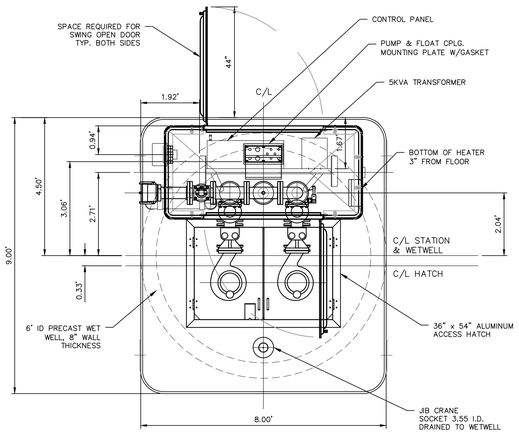

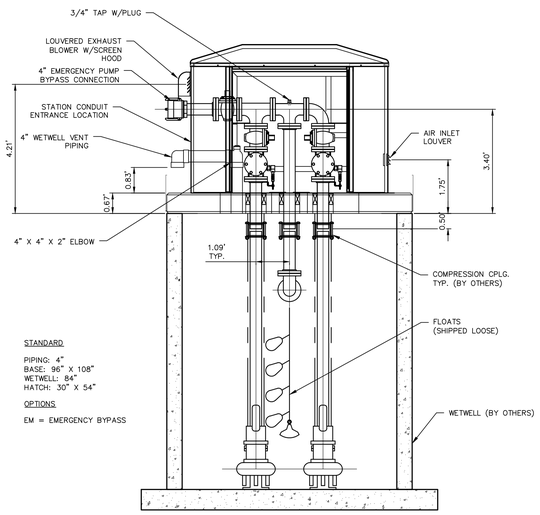

STANDARD

PIPING: 4"
BASE: 96" X 108"
WETWELL: 84"
HATCH: 30" X 54"

OPTIONS

EM = EMERGENCY BYPASS

WET WELL MOUNTED ABOVE GROUND VALVE AND CONTROL SUBMERSIBLE PUMP STATION

NOT TO SCALE

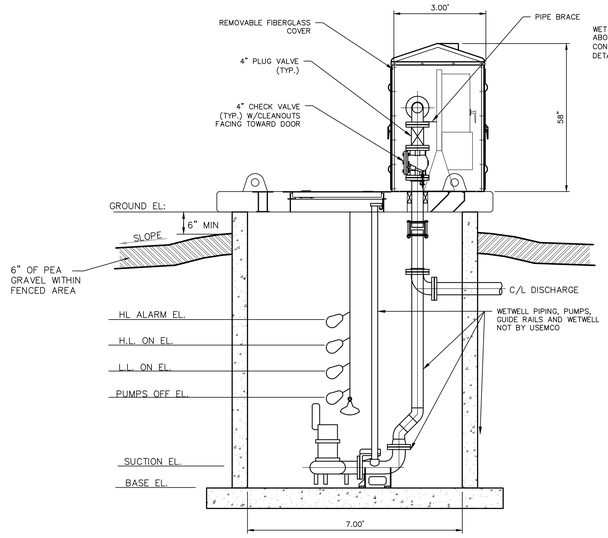

NOTES:

1. ALL ELECTRICAL WIRING TO BE UNDERGROUND. LOCATIONS TO BE DETERMINED IN THE FIELD.
2. FLOATS TO BE ADJUSTABLE IN FIELD.
3. 6.0' INSIDE DIAMETER PRECAST CONCRETE WET WELL TO MEET H-20 LOADING.
4. INTERIOR OF WET WELL TO BE COATED WITH WHITE EPOXY TO BE SERIES 20 POTA-POX AS MANUFACTURED BY TNEMEC.
5. EXTERIOR OF WET WELL TO BE COATED WITH BITUMINOUS WATERPROOFING.
6. ALL ELEVATIONS TO BE FIELD VERIFIED.
7. PAINT REQUIREMENTS: PIPING EXTERIOR AND STEEL SURFACES APPLY 6 MILS EPOXY ENAMEL
8. WET WELL MOUNTED ABOVE GROUND VALVE AND CONTROL SUBMERSIBLE PUMP STATION SHALL BE PUMPMATE II AS MANUFACTURED BY USEMCO INCORPORATED, TOMAH, WISCONSIN.

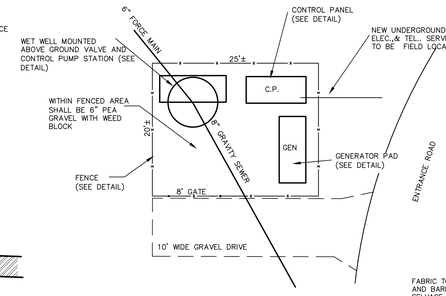

TYPICAL PUMP STATION LAYOUT

NOT TO SCALE

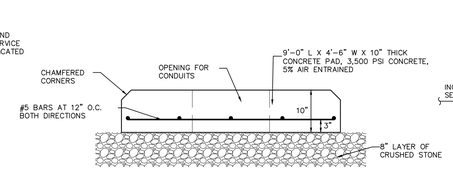

NOTE: PENETRATIONS THROUGH CONCRETE SLAB FOR ELECTRICAL AND NATURAL GAS TO BE FIELD DETERMINED.

GENERATOR PAD DETAIL

NOT TO SCALE

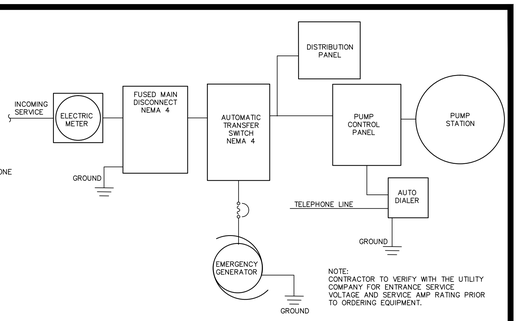

NOTE:
CONTRACTOR TO VERIFY WITH THE UTILITY COMPANY FOR ENTRANCE SERVICE VOLTAGE AND SERVICE AMP RATING PRIOR TO ORDERING EQUIPMENT.

ELECTRICAL SCHEMATIC

NOT TO SCALE

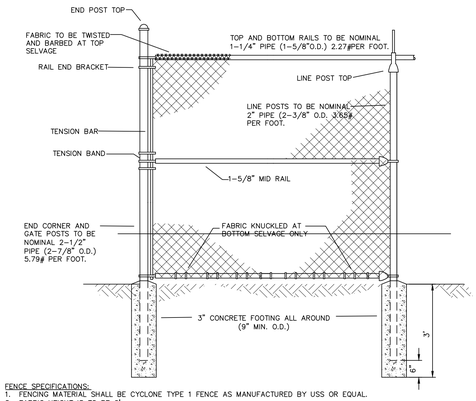

FENCE SPECIFICATIONS:

1. FENCING MATERIAL SHALL BE CYCLONE TYPE 1 FENCE AS MANUFACTURED BY USS OR EQUAL.
2. FABRIC HEIGHT IS TO BE 6'.
3. FABRIC SHALL BE 2" MESH 11 GAUGE (MIN.) WITH BLACK VINYL COATING.
4. GATE SHALL HAVE POSITIVE TYPE LATCHING DEVICES WITH PROVISIONS FOR PADLOCKING.
5. ALL POSTS, RAILS, AND APPURTENANCES SHALL BE GALVANIZED STEEL. PIPE POSTS SHALL HAVE TOPS WHICH EXCLUDE MOISTURE.
6. END, CORNER, PULL, AND GATE POSTS ARE TO BE BRACED WITH THE SAME MATERIAL AS TOP RAIL. ALL POSTS SHALL BE SET IN A CONCRETE FOUNDATION OF 1:2:4 MIX. LINE POSTS SHALL BE EVENLY SPACED 10' OR LESS APART 48" FL.
7. FENCE IS TO BE INSTALLED IN A PROFESSIONAL MANNER TO ENHANCE THE APPEARANCE OF THE INSTALLATION, TO PREVENT ENTRANCE OF PERSONS AND ANIMALS AND TO PROTECT EQUIPMENT. IT SHALL BE THE RESPONSIBILITY OF THE CONTRACTOR TO ASCERTAIN THAT THE GRADE AT THE FENCE LINE IS CORRECT, LEVEL AND FINAL BEFORE THE FENCE IS INSTALLED. ALL POSTS SHALL BE ALIGNED TOP RAIL SHALL BE HELD LEVEL.
8. EXPERIENCED PERSONNEL IN THE FENCE INDUSTRY SHALL INSTALL THE FENCE.

TYPICAL CHAIN LINK FENCE

NOT TO SCALE

DESCRIPTION	QTY	ITEM	ACCESSORIES
RECEPTACLE	1	CROUSE HINDS CATALOG # 5735	WEATHER PROOF COVER & BOX
SWITCH	1	CROUSE HINDS CATALOG # 1891	WEATHER PROOF COVER & BOX
MAIN DISCONNECT	1	SQ. D CLASS 3110 HEAVY DUTY	NEMA 4 S.S.
AUTOMATIC TRANSFER SWITCH	1	KOHLER STANDARD – TRANSITION MPAC 1000 KCT-DFTA-0200S	NEMA 4X
DISTRIBUTION PANEL	1	SQ. D TYPE NQOD 120/240 3ø 3 WIRE	NEMA 3R
FLUORESCENT LIGHT	1	STONCO CLEAN LITE/WR SWC240	RAPID START COLD WEATHER BALLAST
AUTO DIALER	1	SENSAPHONE EXPRESS BY PHONETICS, INC.	TO BE MOUNTED INSIDE PUMP CONTROL ENCLOSURE
GENERATOR	1	60REZGD BY KOHLER POWER SYSTEM 120/240 3 PHASE	WEATHER HOUSING, AUTOMATIC BATTERY CHARGER, CRITICAL EXHAUST SILENCER, BLOCK HEATER
PUMPS, VALVE AND CONTROL STATION	1	PUMPMATE, 25 HP SUBMERSIBLE PUMPS ABS MODEL XFP101G-CB1 120/240 VOLT 3 PHASE	WITH HEATER & AUTO TELEPHONE DIALER
FUSED DISCONNECT	1	SQ. D CLASS 3110 HEAVY DUTY	NEMA 4 S.S.

EQUIPMENT SCHEDULE

NOTE:
CONTRACTOR TO VERIFY WITH THE UTILITY COMPANY FOR ENTRANCE SERVICE VOLTAGE AND SERVICE AMP RATING PRIOR TO ORDERING EQUIPMENT.

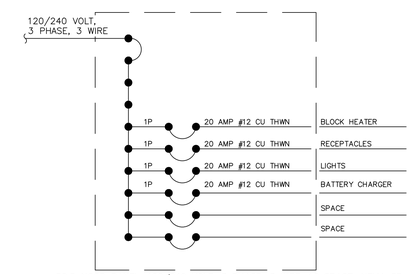

SQ.D NQOD PANEL, 120/240 VOLT, 3 PHASE, 3 WIRE, 12 SPACE, NEMA 3R

DISTRIBUTION PANEL

NOT TO SCALE

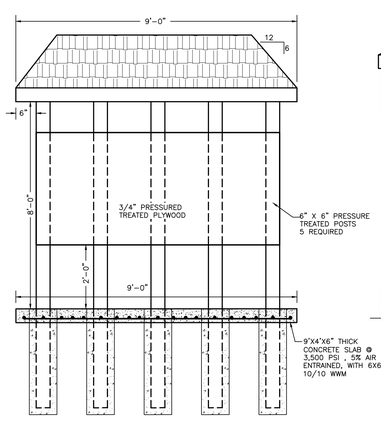

NOTES:
1. ALL WOOD TO BE PRIMED AND PAINTED.

TYPICAL ELECTRICAL STRUCTURE DETAIL

NOT TO SCALE

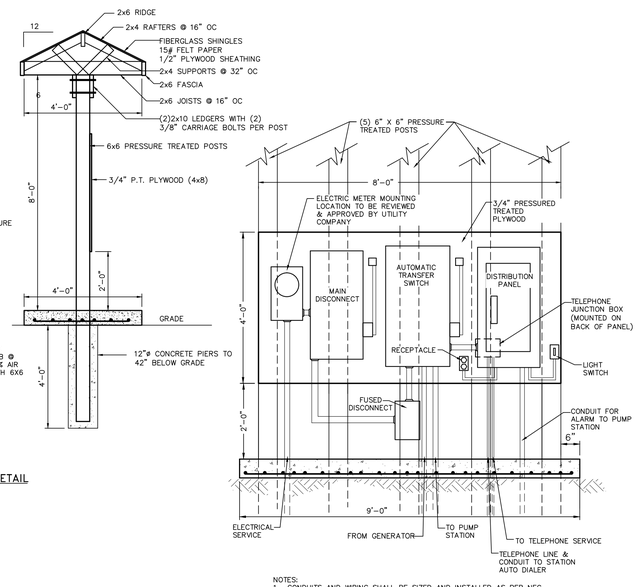

NOTES:

1. CONDUITS AND WIRING SHALL BE SIZED AND INSTALLED AS PER NEC.
2. ALL WIRING SHALL BE COPPER, RATED FOR 600 VOLT. TYPE THWN.
3. ALL CONDUITS SHALL BE GALVANIZED STEEL. RIGID.
4. INSTALL SEPARATE GROUND WIRE FOR EACH MOTOR AND PANEL.
5. ALL ELECTRIC SHALL CONFORM TO THE LATEST NEC.

ELECTRICAL PANEL DETAIL

NOT TO SCALE

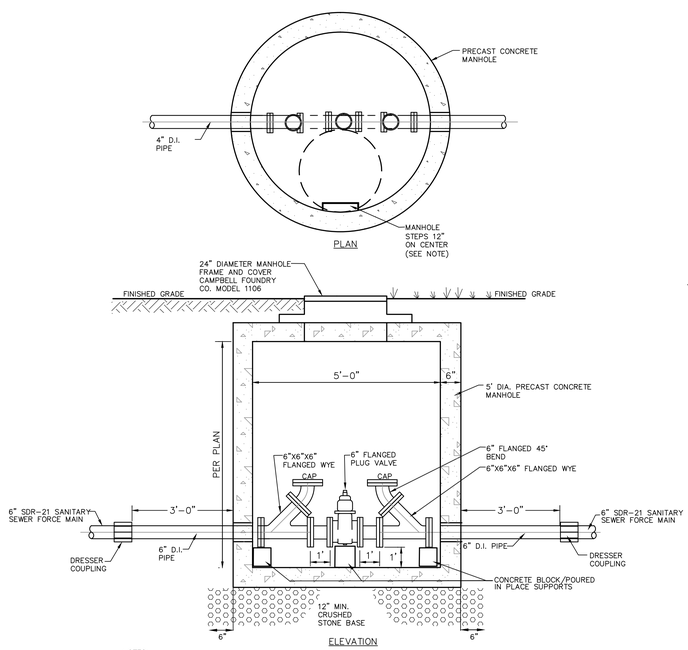

NOTES:

1. PRECAST CHAMBER, WITH FLAT SLAB, TO MEET AASHTO HS20-44 LOADING REQUIREMENTS.
2. ALL JOINTS TO BE CAULKED.
3. BACKFILL AROUND STRUCTURE TO BE N.Y.S.D.O.T. ITEM# 304.12, COMPACTED IN 8" MAX. LIFTS. BACKFILL IN OFFROAD AREAS CAN BE APPROVED EXCAVATED MATERIAL OR R.O.B. GRAVEL WITH NO STONES LARGER THAN 6" IN DIAMETER, COMPACTED IN 10" MAX. LIFTS. BACKFILL IS TO BE COMPACTED USING JUMPING JACK COMPACTOR, ACHIEVING 95% COMPACTION.
4. STEPS TO BE COPOLYMER POLYPROPYLENE PLASTIC, WITH 1/2" GRADE 60 STEEL REINFORCEMENT.

CLEAN OUT MANHOLE DETAIL

NOT TO SCALE

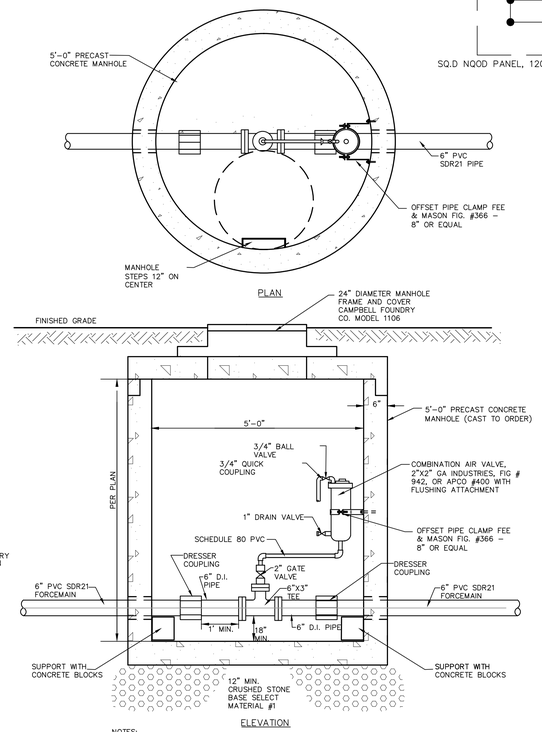

NOTES:

1. PRECAST CHAMBER, WITH FLAT SLAB, TO MEET AASHTO HS20-44 LOADING REQUIREMENTS.
2. ALL JOINTS TO BE CAULKED.

AIR RELEASE/VACUUM RELEASE VALVE CHAMBER DETAIL

NOT TO SCALE

COPYRIGHT 2016, LANC & TULLY, P.C.

LANC & TULLY
ENGINEERING AND SURVEYING, P.C.
P.O. Box 687, Rt. 207
Goshen, N.Y. 10924
(845) 294-3700

MERLIN ENTERTAINMENTS

FORREC

MASER CONSULTING P.A.

SEWER PUMP STATION / FORCEMAIN DETAILS

LEGOLAND NEW YORK

TOWN OF GOSHEN
ORANGE COUNTY, NEW YORK

Revisions:

No.	Description	Issue Date
1	PLAN DEVELOPMENT	SEPTEMBER 1, 2016
2	PLAN DEVELOPMENT	NOVEMBER 3, 2016
3	FEIS SITEPLAN	MAY 18, 2017

CAD File: 160042-WATER-SEWER DETAILS	
Layout: Pump Sta	
Drawn By: dmk	Checked By: JOR
Scale: N/A	Project No.: 16-0042
Tax Map No.: SEE SHEET 2	
Date: JULY 21, 2016	
Sheet/Drawing No.: C 40 OF 40	

COPIES FROM THE ORIGINAL OF THIS DOCUMENT NOT MARKED WITH AN ORIGINAL OF THE PROFESSIONAL ENGINEER'S AND/OR LAND SURVEYOR'S STAMP OR EMBOSSED SEAL SHALL NOT BE CONSIDERED VALID, TRUE COPIES.

UNAUTHORIZED ALTERATION OR ADDITION TO THIS DOCUMENT IS A VIOLATION OF SECTION 7209-2 OF THE NEW YORK STATE EDUCATION LAW.